BURNERS OF THE NEW GENERATION E&M

E & M COMBUSTION
energía y medio ambiente

JBD DUOBLOC BURNERS

- ALL TYPE OF LIQUID AND GASEOUS FUELS
- LOW POLLUTANT EMISSIONS
- ADAPTABLE TO ALL TYPE OF COMBUSTION CHAMBERS
- ELECTRONIC REGULATION

INNOVATIVE COMBU

Gas flame.

Industrial combustor.

E&M COMBUSTION IS INNOVATION

Since the foundation of the company, innovation has turned into one of the basic and fundamental goals of E & M Combustion. Our company tries to provide increasingly innovative equipment for the market based on three fundamental goals:

- Developing burners with more and more efficiency.
- Reducing emission of pollutants without losing energetic efficiency.
- Designing equipment in a way that they achieve qualities which are highly valued nowadays such as: decreasing the level of dB, easy access to burner elements, resistance, using new material, etc.

For achieving this goal, we think that there is no better way than the collaboration of our R+D+i department with technological centers of combustion in different countries. Thus, we work with the most efficient researchers, which allows us to exchange information and work on several investigations in such a way that the final result is achieving different options of improvement which is in other words, an extremely satisfactory and innovative product for the client.

Our working implements are multiple. On the one hand, we use the most modern software for the simulation of fluids. On the other hand, our devices are fully tested in a complete group of installations such as: a semi –industrial combustor, laminated flow combustor, aerodynamic test bench , etc. Finally, our burners are tested in boilers and furnace plants in order to provide the market with a totally reliable and especially innovative product.

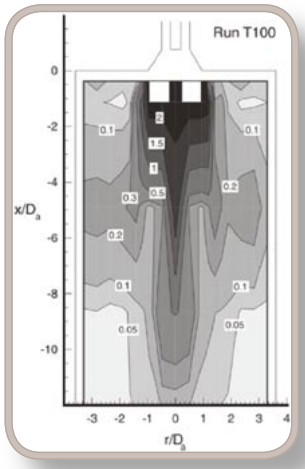

Software simulation.

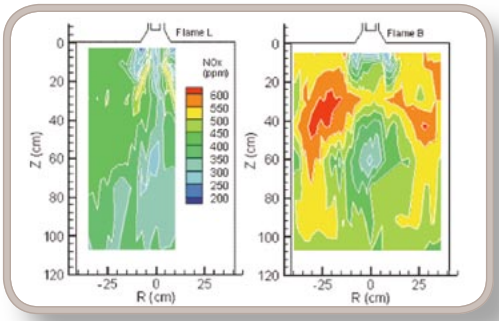

Flame simulation.

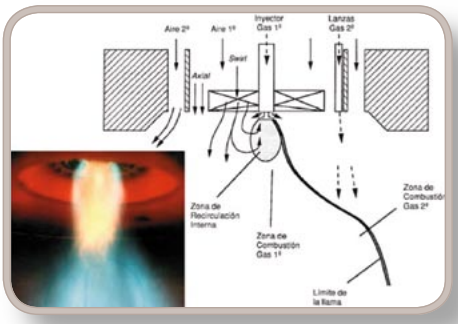

Low NO_x flame.

DESCRIPTION OF THE BURNER COMPONENTS

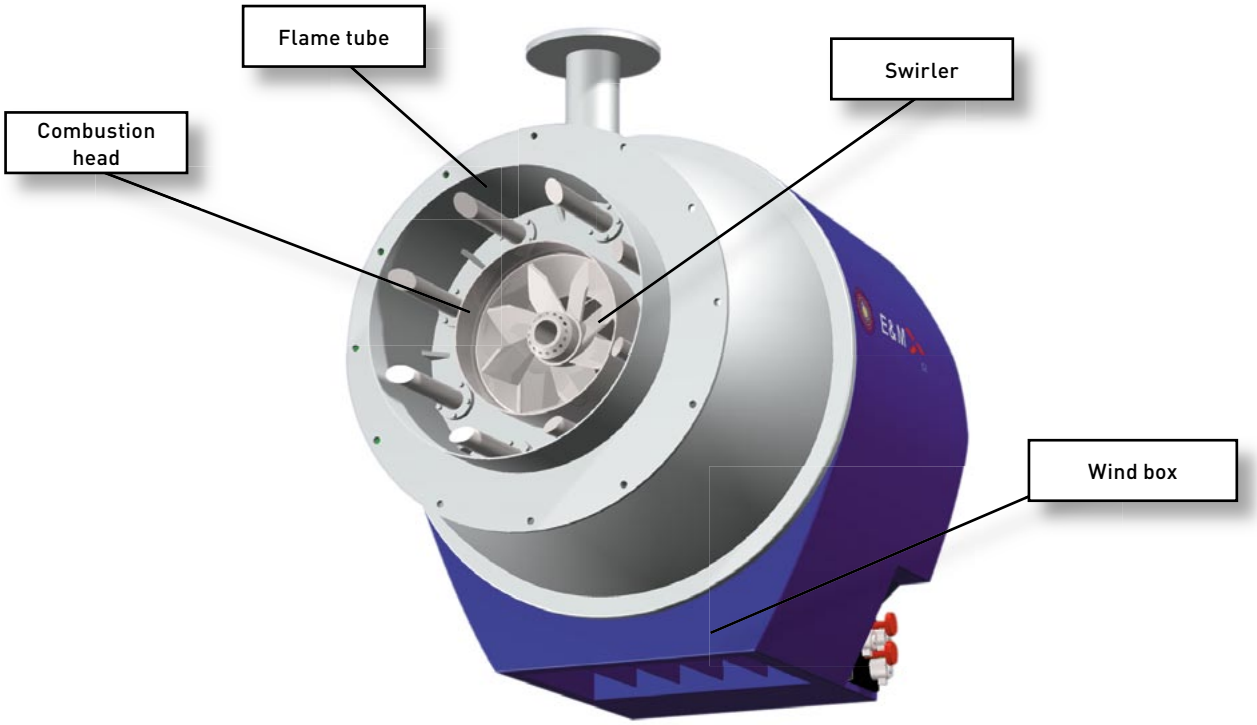

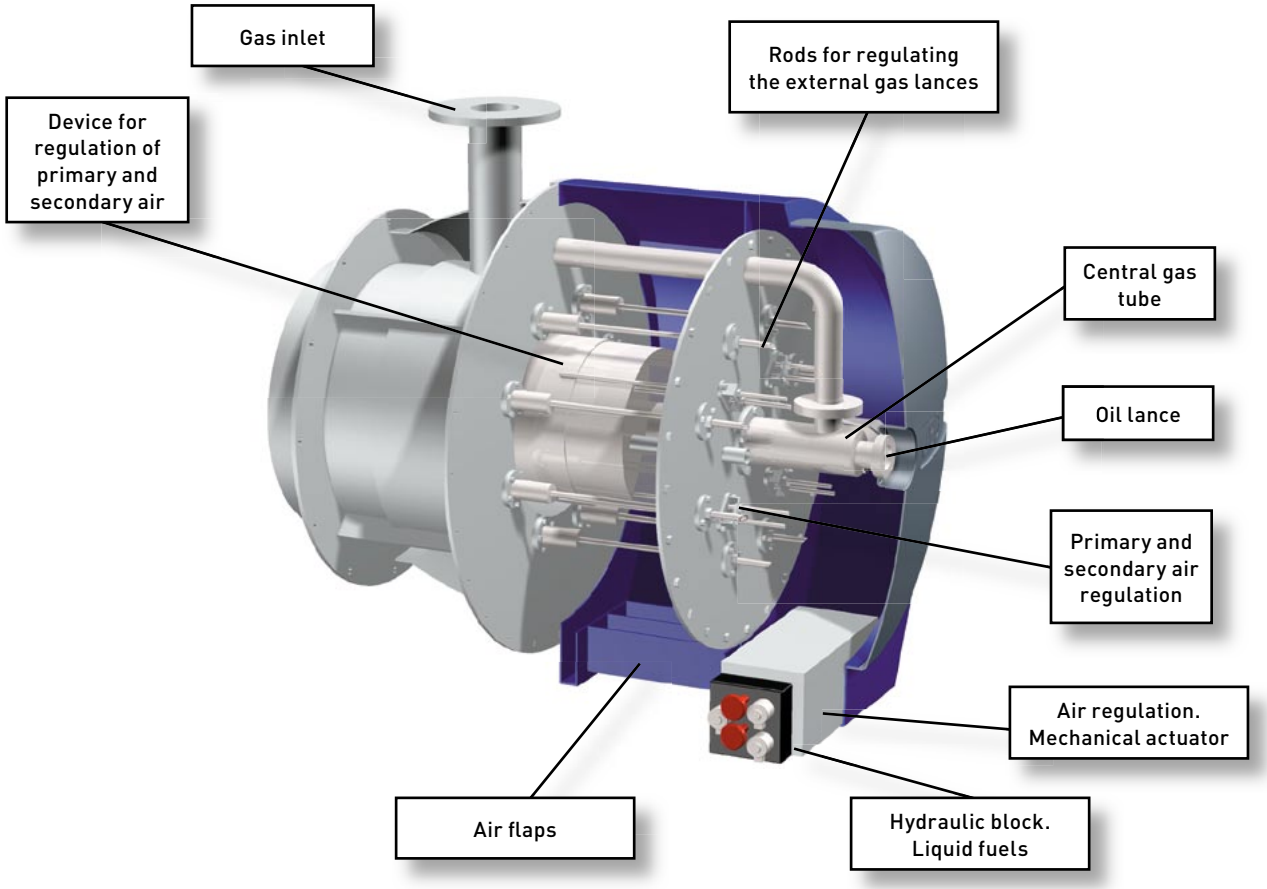

INNOVATIVE COMBU

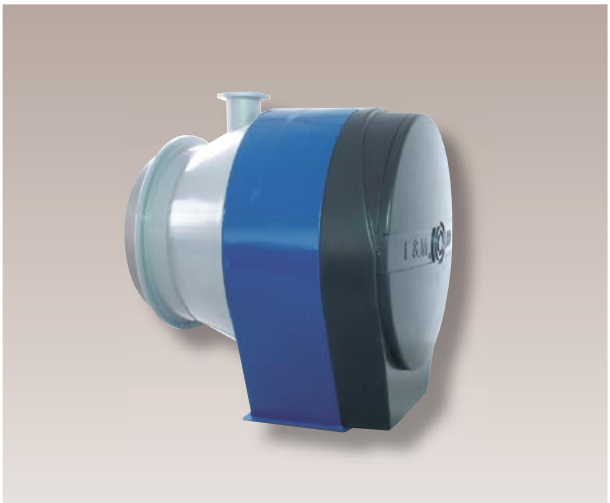

Innovative design of burner.

E&M TECHNOLOGY

E&M Combustion, through its R+D+i department and with the collaboration of technological centres from different countries, who specialise in combustion techniques, has developed a new range of state-of-the-art burners whose main features are: high energy efficiency, low emission of pollutants and the use of the most advanced control systems.

The design, development and manufacturing are based on the European standards EN 676 – EN 267 and have been carried out under strict quality control.

DESIGN INNOVATION

The innovative design is not only aesthetic but also allows us to obtain several features that considerably improve those which up to now have been obtained with conventional designs of burners. The rear side of the device is made of polyester, making it easy to access all the adjustment components as well as facilitating the maintenance and cleaning of the burner.

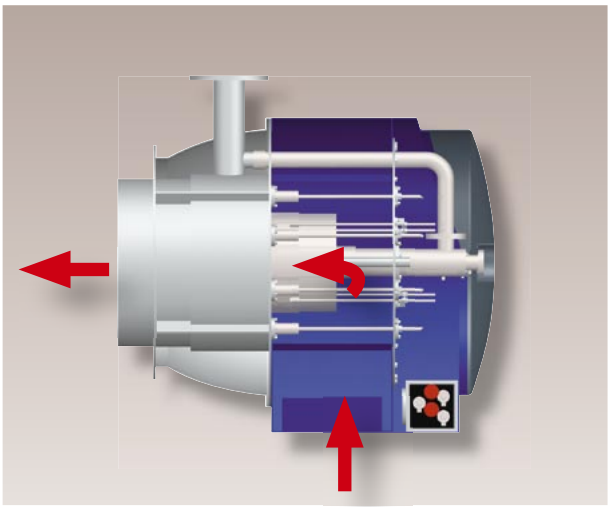

Combustion air circulation.

THE DUOBLOC SYSTEM

EXTERIOR FAN

Given that the burners are separate, the fan is not integrated into the device. The burner body is made of steel plate, with a box attached to it where we find the air adjustment flaps.

The air enters the equipment through the box where its flow is controlled, and then enters the combustion head. These burners have the advantage that they can be placed in the boiler at any rotation angle over the horizontal.

Another advantage of these burners is that they can work with preheated air up to a temperature of 400° C, therefore considerably increasing the efficiency of the system.

EASY ACCESS

The burner is designed for easy access to the different elements of the device to facilitate its maintenance or the replacement of any of the components. It offers the following advantages:

- The rear enclosure that covers the burner is manufactured in polyester to offer low weight properties and allow easy handling of the adjusting elements of the device.
- All parts of the burner can be accessed without having to disassemble it.
- All the combustion head elements can be adjusted without having to disassemble any part of the equipment, ensuring a faster and easier setting up process.
- Easy disassembling of the exterior gas lances, central gas oil lance, primary and secondary air swirlers, ignition system, flame detection, as well as the atomising oil lance (liquid fuel burners).

Easy acces to the different components

ELECTRONIC SETTING

The burner is controlled from the external control panel, which includes a switchboard for electronic regulation. This controls the different servo-motors for the adjustment of the air flaps, butterfly valve for gas and the liquid fuel adjustment valve; a frequency converter can also be controlled. An O2 probe can be connected to optimise the combustion. This switchboard controls all the operations of the burner (see page 10).

The electronic setting includes a display panel which shows the general condition of the burner. We can obtain information about:

- The load value of the burner.
- The set and real value of the pressure or temperature of the generator.
- The intensity of the flame detection.
- The O_2 and CO value if using continuous measuring probes in both elements.
- Running times and number of start-ups.
- Fault record.

This display enables us to know straight away the condition of the burner and the fault warnings, and when these have occurred. This greatly reduces the time spent on repairs of faults or breakdowns.

Additionally, if requested, a mechanical adjustment can be fitted.

Electric control panel for boiler and burner regulation

INNOVATIVE COMBU

Gas & light oil combustion head.

COMBUSTION HEAD

RESPECT FOR THE ENVIRONMENT

The Low *NOx* heads of the burner have been carefully designed to achieve low levels of polluting emissions and therefore comply with the strictest regulations on emissions of polluting particles into the atmosphere, as well as achieving a high level of heat optimisation (between 91 and 94 % of the N.C.V.).

The NOx emission values which are achieved with natural gas vary between 80 and 100 mg/kW depending on the type of boiler.

Ignition burner.

GAS HEAD

DIFFERENT FLAME SHAPES AND LENGTHS

The gas head is made up of an external gas ring from which a series of lances come out and in the centre there is a gas pipe in the form of crown. The gas distribution consists of 20 % in the central ring and 80 % in the external lances, producing a combustion in stages, therefore achieving a significant reduction of NOx and greater flame stability.

By opening the burner's rear covering, the head allows the external gas lances to be triggered by means of several rods which are connected to these. These lances are mobile, which allows for different positions, therefore helping to achieve different size flames. This, together with the possibility of using swirlers, allows this burner to vary the size of the flame and adapt to any kind of boiler.

When dealing with liquid fuels, the aforementioned swirlers will also allow you to obtain different size and shape flames.

The ignition is performed by using a pilot burner or ignition burner. This internal burner produces a flame which is stable enough to be able to produce a smooth ignition, without any pulsations.

The whole combustion head of the burner is made in heat-resisting steel for high temperatures, therefore guaranteeing long-lasting properties.

Internal swirlers for primary and secondary air.

COMBUSTION HEAD

ATOMISATION SYSTEMS

The JBD burners are suitable for the combustion of any type of liquid fuel. This can be performed by high-pressure mechanical atomisation or instead, by means of steam atomisation.

This last system is highly recommendable for large consumptions and for fuels with high viscosity levels, given that it offers the following advantages.

- Discharge of any possible waste that is deposited in the oil lances thanks to the steam action, therefore reducing maintenance work.
- Wide modulation range up to 1÷10.
- Easy control of the shapes and sizes of the flame.
- Much cleaner combustion, increasing the average lifetime of the boiler.

Atomizing oil lance.

HYDRAULIC BLOCK

SIMPLICITY

Up to 14.500 model, a hydraulic block is used for the control and regulation of the combustible liquid. This equipment , designed by E&M Combustion engineers, allows the whole combustible regulation system to be used in an aluminium block. The advantages of traditional regulation systems are as follows:

- Reducing space in regulation and control system.
- Eliminating possible leakage produced when the combustible liquid runs through the pipe connectors.
- Immediate visualisation of regulation parameters (pressure of inlet and outlet, position of the regulation actuator of the combustible liquid's flow,...).
- Ability of changing magnetic valves easily (they are threaded to the block)
- Connected to the pump by two flexible pipes.

Hydraulic block.

BURNER POWER CURVES

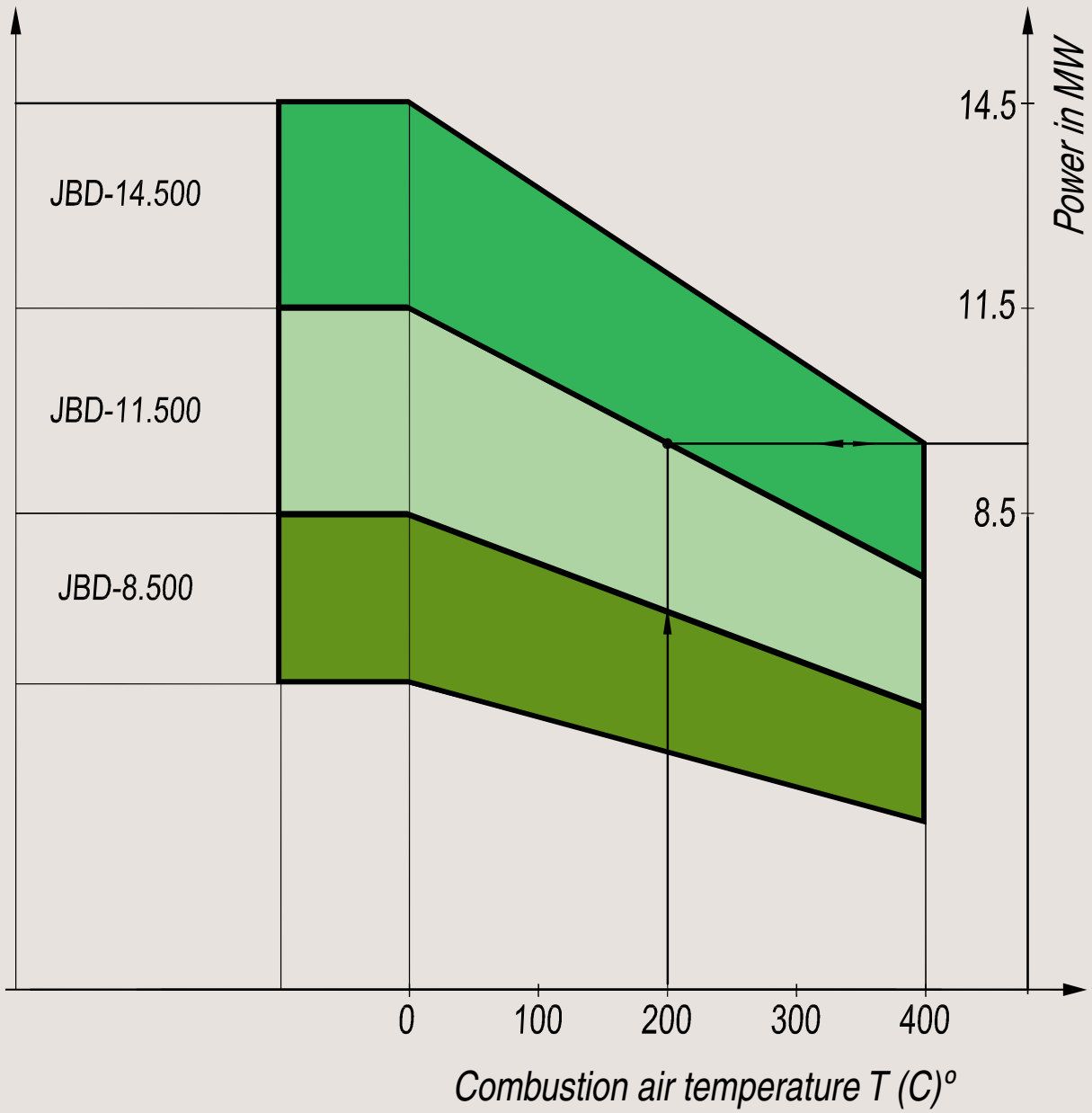

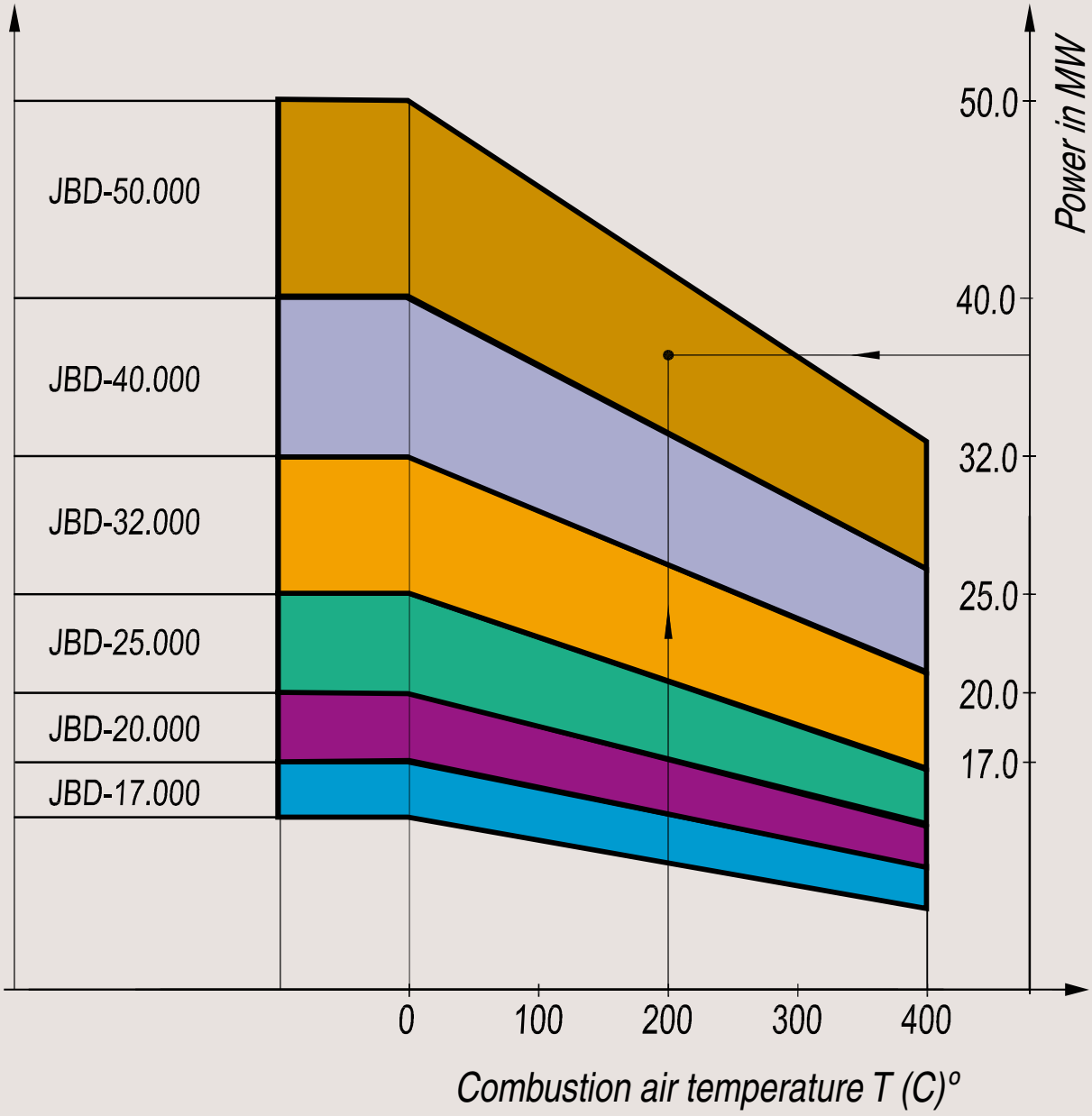
JBD-50.000
JBD-40.000
JBD-32.000
JBD-25.000
JBD-20.000
JBD-17.000
50.0
40.0
32.0
25.0
20.0
17.0
Power in MW
0
100
200
300
400
Combustion air temperature T (C)º

ELECTRONIC REGULATION

ADVANTAGES IN ACCESSIBILITY

Burners manufactured by E&M combustion incorporate electronic regulation switchboards in order to have precise control on the fuel- air ratio. This electronic regulation system presents advantages in traditional regulation systems based on mechanical systems, such as:

- All control and regulation functions of the burner are integrated in one single device, including sequences of ignition, security controls, P.I.D. regulation, leakage test and flame detection system.
- It remarkably increases the precision of the regulation ,avoiding mechanical hystereseis produced in rods and cams of the traditional regulation .This is operated by the transmission of electrical pulses to individual actuators.
- They can control up to four channels.
- It incorporates a visualisation display of information that can quickly show the state of the burner as well as fault memories and hours of operation.
- Presents an external connection to P.C. or to P.L.C. bus system.
- Reduces time of commissioning due to pre-regulations in the factory.

ADVANTAGES FOR SAVING ENERGY

One of the great advantages of electronic switchboards is the possibility of using frequency converters and oxygen probes as elements that save energy. These connections are optional, but reduce energy expenses, as for the ones related to the consumption of the motor as well as ones for combustion efficiency.

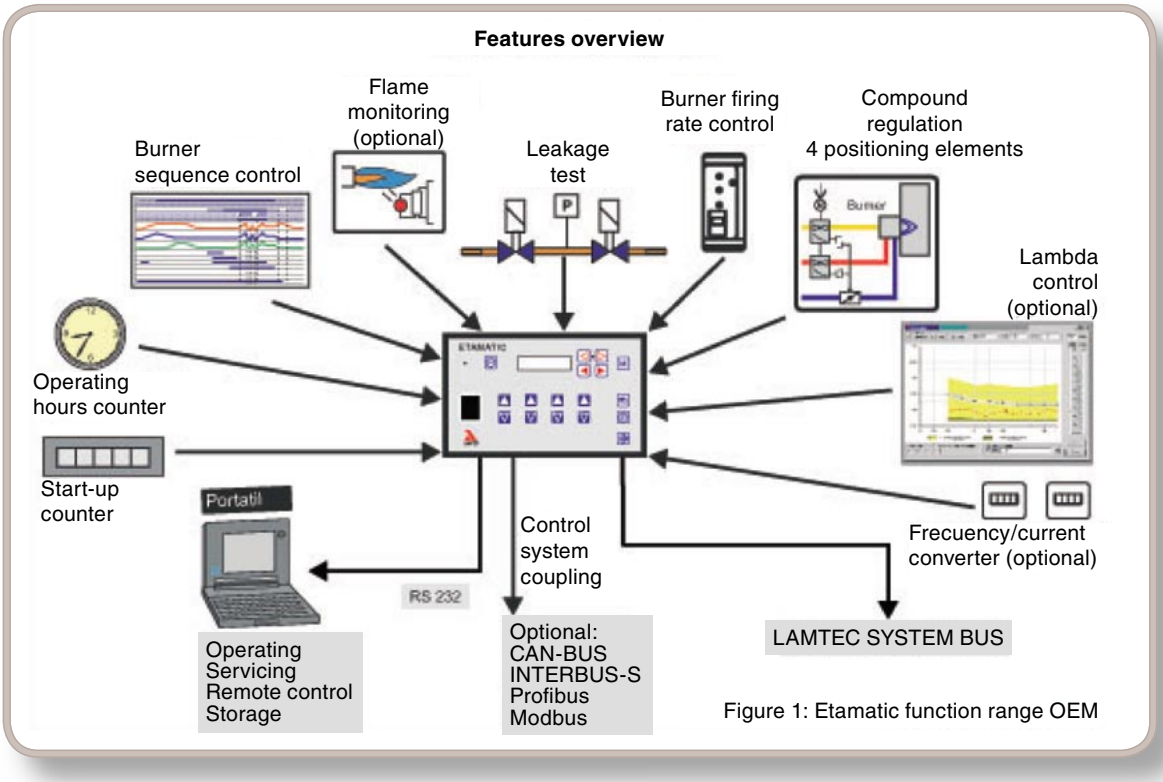

Figure 1: Etamatic function range OEM

ENERGETIC EFFICIENCY

A GREAT DEAL FOR SAVING

One of the greatest advantages that E&M burners of the new generation presents is its high energetic efficiency thanks to these three fundamental factors:

1) The combustion heads have been designed for achieving excellent combustion with minimum excess of oxygen obtained, and as a result, a remarkable efficiency in combustion.

2) The fans are designed to achieve an excellent efficiency .They also allow us to use a frequency converter for the regulation of the air flow.

3) It is possible to use optimizing O_2 & CO systems for improving combustion efficiency.

Advantages of using a frequency converter

Saving energy consumed by motor
It is possible to estimate that the figure on the right shows a notable energy saving by using a frequency converter. In curve 1 the % of the consumption of the motor using a regulation for traditional air flaps is described. In curve 2 we have the % of electrical consumption used in a speed converter. Both curves depend on the load of the burner. As we can see, between 20-80% of the load of the burner, saving becomes very important. This varies between 30-50% depending on the burner's power in every moment.

Reduction of the level of noise of the motor
One of the other important advantages of using a frequency converter is reducing the level of dB that is produced by the motor. In the graph of fig.2, we can observe the two curves that indicate the level of noise of the device with and without a speed converter. As we can see at some points the difference is really important. In addition to this improvement, the design of the burner itself makes E&M burners one of the quietest in the market.

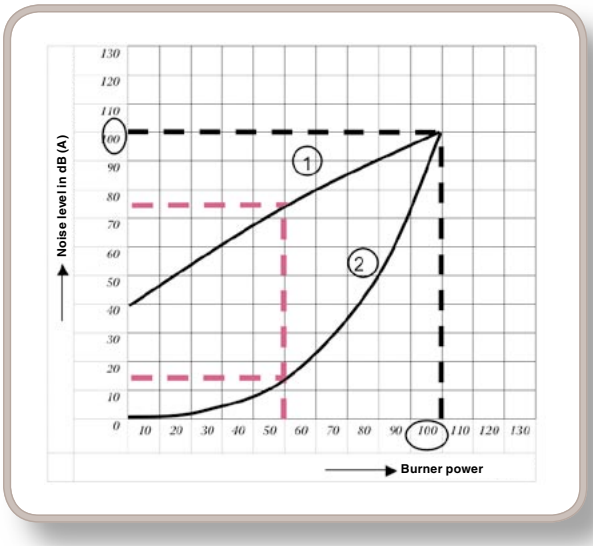

1 = Control by air flaps (traditional burners)
2 = Control by frequency converter

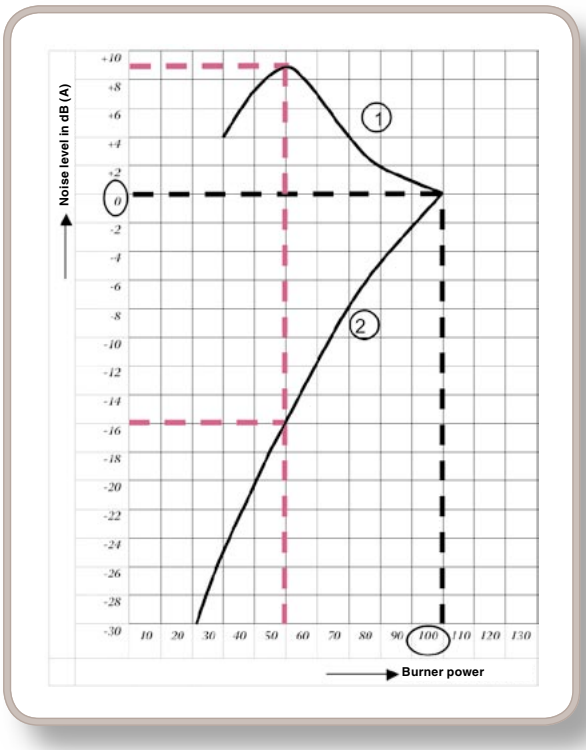

1 = Control by air flaps (traditional burners)
2 = Control by frequency converter

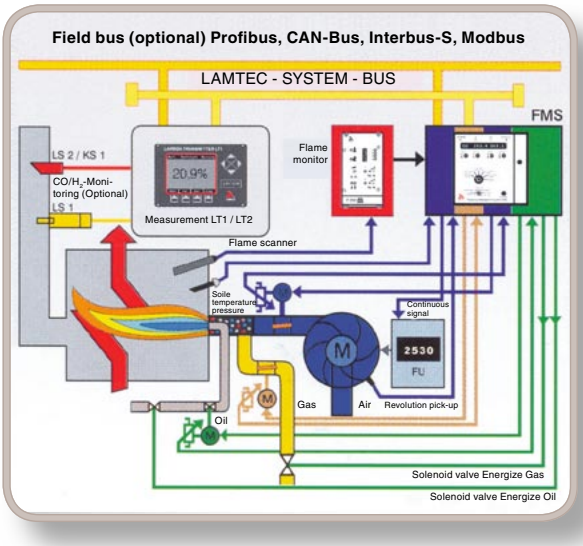

CO-O_2-CONTINOUS MEASUREMENT

A CHALLENGE FOR SAVING

Today, mainly O_2 regulations based on zirconium dioxide oxigen probes, known as Lambda probes, are used for monitoring and optimisation of furnace plants. They offer the following advantages.

- Direct measurement in most exhaust gas without gas preparation.
- Rapid reaction and adjustment time $t_{90} < 15$ s.
- Permanent measuring value coverage.
- No gas sample extraction.
- Low maintenance.

With O_2, regulation the fluctuations affecting combustion should be generally compensated for. In addition to this, O_2 regulation also monitors the fuel-air ratio of the combustion. If this oversteps the permissible values, the alarm is set off.

Fluctuations of the following have a general disruptive efffect on combustion.

Air:	Temperature
	Pressure
	Humidity
Fuel:	Heat value
	Temperature
	Viscosity
	Density
	Fluctuation in gas pressure
Pollution:	Burner
	Boiler
Mechanics:	Mechanical hysteresis (rod play)

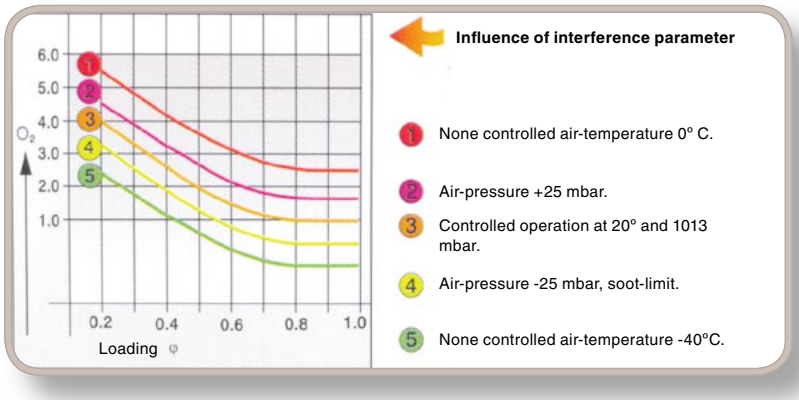

All these measurements demand more combustion air for safety reasons, than would be necessary for ideal combustion.

These excessive air volumes are heated unnecessarily and transport the heat as a loss via the chimeney.

Excess air volumes cause reduced CO2 values and increased waste gas temperatures and concur fully with the principle of furnace efficiency or the principle of furnace waste gas loss.

Using Siegert's formula furnace efficiency can be calculated by using the measured residual oxigen content of the exhaust gases and the difference temperature: $t_{\text{waste gas}} - t_{\text{intake air}}$.

$qA = (tA \cdot tL)(A2 / 21 - O2) + B$ [%]
$ήF = 100 - qA$
qA = waste gas loss
ήF = furnace efficiency

	Heating oil	Natural gas	Town gas	Coal gas	Liquid gas
A2 =	0.68	0.66	0.63	0.63	0.60
B=	0.007	0.009	0.011	0.008	0.011

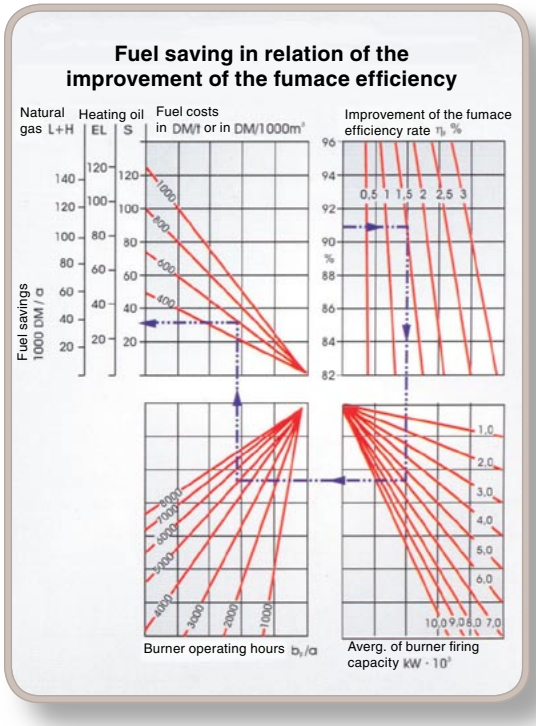

From this formula it can be seen that:

1% O_2 reduction yields an increase in fumace efficiency.

- with natural gas ca. 0,60 %
- with light oil ca. 0,70 %
- with heavy oil ca. 0,75 %

If the influences are added up, this gives the following example for possible improvements in efficiency:

	NATURAL GAS H	HEATING OIL El	HEATING OIL S
1. Heat value deviations.	1.5%	—	0.3%
2. Alteration of burner burden due to oil/gas pressure, derivations, viscosity and temperature changes.	0.5%	0.4%	1.7%
3. Air-temperature.	0.4%	0.4%	0.4%
4. Air-pressure changes.	0.3%	0.3%	0.3%
TOTAL	**2.7%**	**1.1%**	**2.7%**
As extreme values were assumed for these alteration, only half of this sum can be reckoned with on average in the course of a year, ie;	1.35%	0.55%	1.2%
Supposing that by O_2-regulation as a result of compensating for the fluctuation the burner adjustments can be set on average at approx. 1 vol.% O_2 closer to optimum resulting in an improvement of	0.60%	0.70%	0.75%
Average per year	**1.95%**	**1.25%**	**1.95%**

DENOMINATION OF THE BURNER

JBD	4.500	G	LT ###
Burner´s system: Industrial duobloc burner	Burner power	Fuel: G-Natural Gas LO-Light oil FO-Heavy oil GLO-N.G./Light oil GFO-N.G./Heavy oil	Length of flame tube

INNOVATIVE COMBU

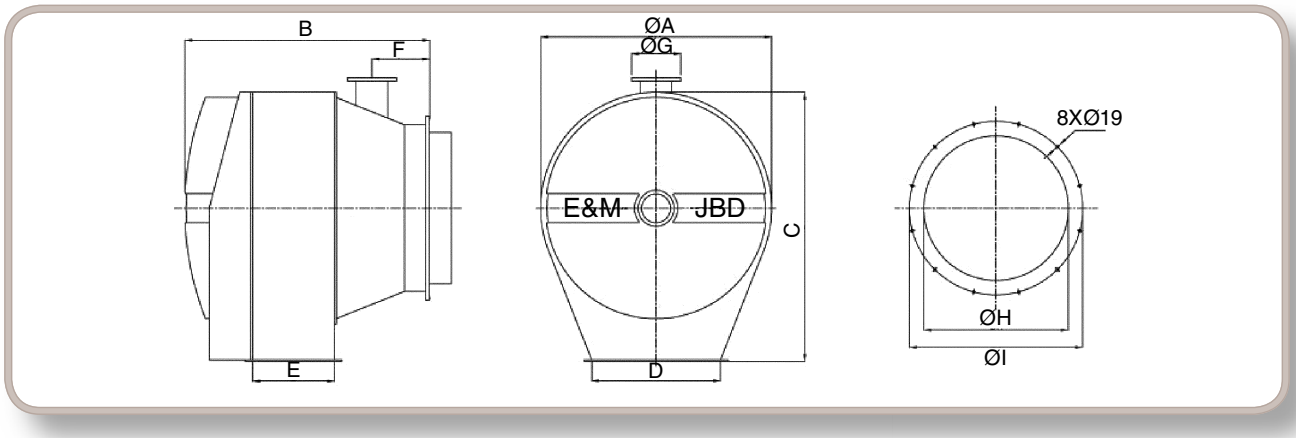

DIMENSIONS JBD

	Measurement in mm								
Model	ØA	B	C	D	E	F	ØG	ØH	ØI
JBD-8.500-G	1.000	1.040	1.150	510	240	250	DN 80	450	750
JBD-11.500-G	1.000	1.040	1.150	510	290	250	DN 80	480	750
JBD-14.500-G	1.000	1.040	1.150	510	350	250	DN 80	540	750
JBD-17.000-G	1.300	1.220	1.350	620	335	300	DN 125	720	950
JBD-20.000-G	1.300	1.2200	1.350	620	375	300	DN 125	760	950
JBD-25.000-G	1.300	1.220	1.350	620	425	300	DN 125	810	950
JBD-32.000-G	1.600	1.565	1.860	870	425	400	DN 150	850	1.200
JBD-40.000-G	1.600	1.615	1.860	870	475	400	DN 150	975	1.200
JBD-50.000-G	1.600	1.690	1.860	870	550	400	DN 200	1.060	1.200

Note: The illustrations and information demonstrated are orientative. E&M Combustion S.L keeps the right to make all necessary modifications for the improvement of our products.

DESCRIPTION OF BURNER COMPONENTS

Description	G	LO	FO	GLO	GFO
Body of burner, assembly flange, external covering, air flaps for air regulation, combustion head, ignition trafo. , ignition cable, ignition electrodes, flame tube, swirler.	•	•	•	•	•
Electronic switchboard Etamatic OEM (external)	•	•	•	•	•
Electric control panel (external)	•	•	•	•	•
Visualisation display (external)	•	•	•	•	•
Double magnetic valves for gas	•			•	•
Gas magnetic valve for pilot flame ignition (optional)	•	•	•	•	•
Butterfly valve for gas	•			•	•
Air pressure switch	•	•	•	•	•
Self-checking flame detector	•	•	•	•	•
Gas pressure switch	•			•	•
Actuating motor for air flaps	•	•	•	•	•
Actuating motor for gas butterfly valve	•			•	•
Actuating motor for regulation of combustible flow		•	•	•	•
Motorpump outlet for combustible liquid (external)		•	•	•	•
Hydraulic block (up to model 14.500)		•	•	•	•
Hydraulic circuit (from model 14.500)		•	•	•	•
Preheater (external)			•		•
Oil lance + nozzle		•	•	•	•

GAS TRAIN DRAWING

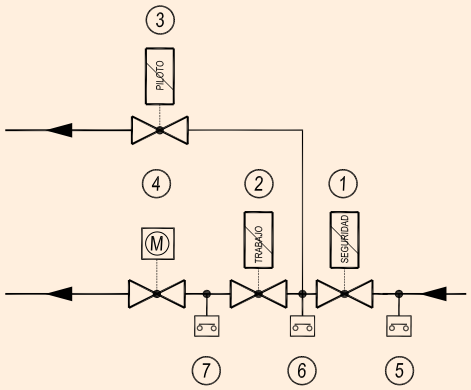

1. Safety solenoid gas valve.
2. Regulation solenoid gas valve.
3. Pilot flame solenoid gas valve.
4. Gas flow regulation servo valve.
5. Min. gas pressure switch.
6. Min. gas pressure switch.
7. Max. gas pressure switch.

LIQUID FUELS DRAWING

HIGH PRESSURE MECHANICAL ATOMISASTION

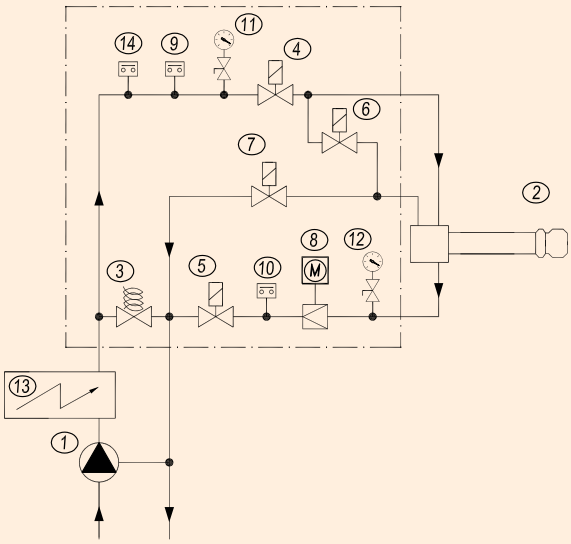

STEAM ATOMISATION

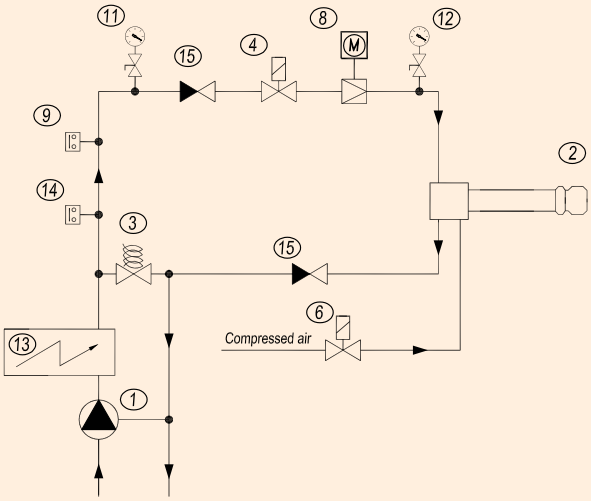

1. Atomisation motor pump
2. Oil lance
3. Pressure regulating valve
4. Fuel inlet NC magnetic valve
5. Fuel return NC magnetic valve
6. Atomizing oil lance opening NC magnetic valve
7. Atomizing oil lance closing NO magnetic valve
8. Flow regulating servo valve
9. Min. Pump pressure switch
10. Max. Pump return pressure switch
11. Pump pressure manometer
12. Return pressure manometer
13. Electric preheater (heavy-oil)
14. Cold fuel thermostat
15. Anti – return valve

TECHNICAL SERVICE AND COLLABORATION WITH THE CLIENT

One of the big advantages of our company is the continuous communication and cooperation with our clients. Our success in this business is based in a close collaboration and relationship with our customers by showing them how to handle our equipments and with a technical personal assistance. We are a very flexible company in this material, giving a fast answer and a good service to all problems that can happen in our installations, with an easy accessibility to our engineers.

We really take care very much this aspect of business based in the close communication and friendship with our customer.

www.emcombustion.es