Catalogue
E&M Burners

COMBUSTION
INTEGRAL
SOLUTIONS

INDEX
EM LIGHT-OIL BURNERS

1 stage from 14 to 236 kW

Pg. 4

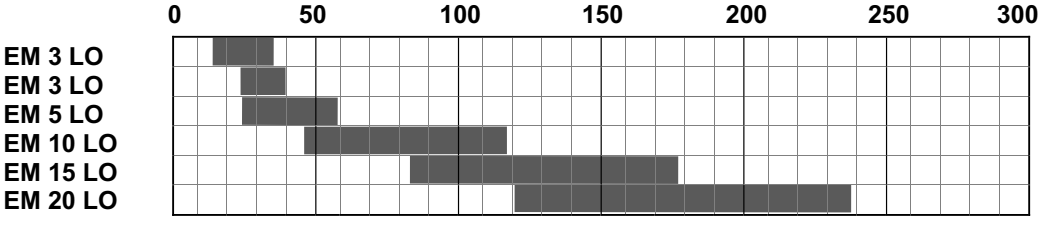

2 stages from 24 to 1.740 kW

Pg. 5

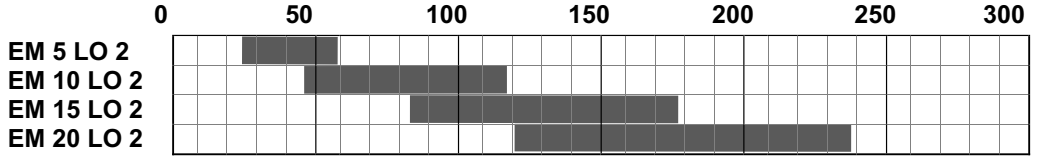

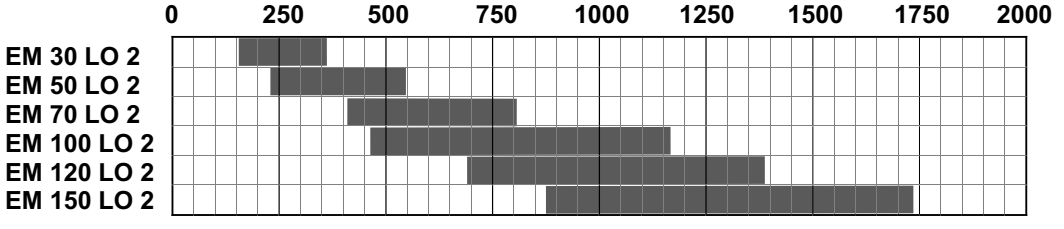

3 stages from 700 to 2.900 kW

Pg. 7

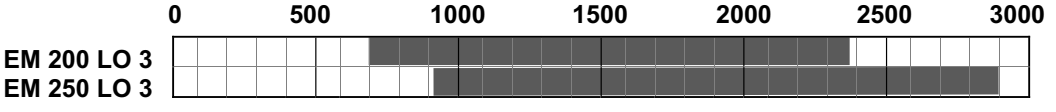

Modulating from 237 to 2.900 kW

Pg. 8

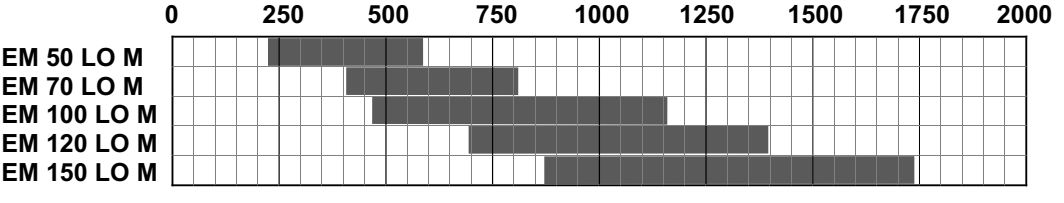

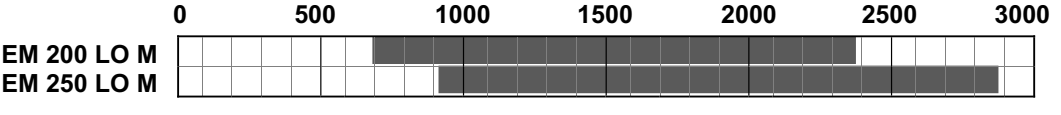

INDEX
EM GAS BURNERS

1 stage from 12 to 522 kW

Pg. 10

EM 3 G
EM 5 G
EM 8 G
EM 15 G
EM 20 G

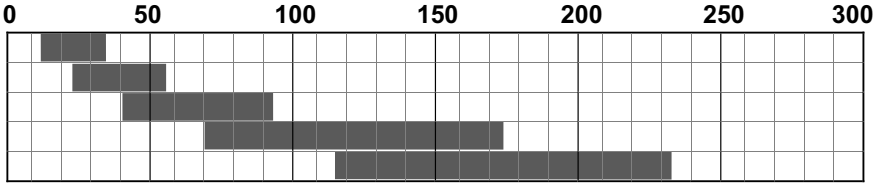

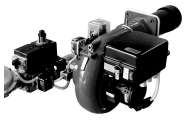

EM 30 G
EM 45 G

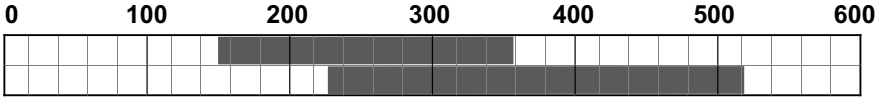

2 stages from 23 to 2.900 kW

Pg. 12

EM 5 G 2
EM 8 G 2
EM 15 G 2
EM 20 G 2

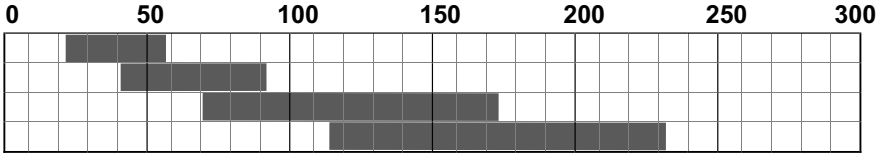

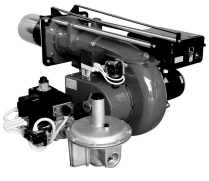

EM 30 G 2
EM 45 G 2
EM 70 G 2
EM 100 G 2
EM 150 G 2

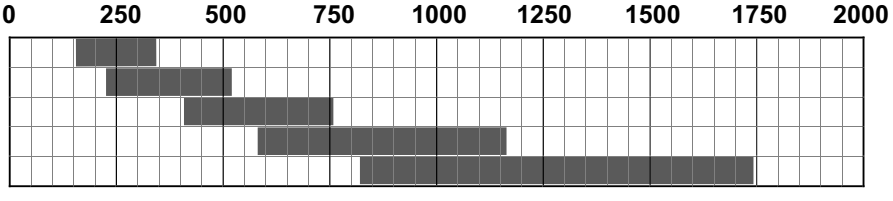

EM 190 G 2
EM 250 G 2

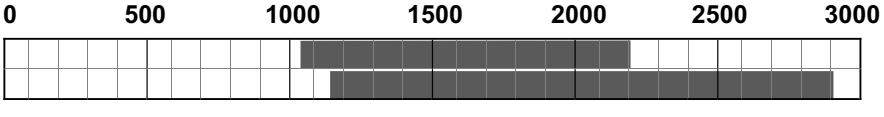

Modulating from 41 to 2.900 kW

Pg. 15

EM 8 G M
EM 15 G M
EM 20 G M

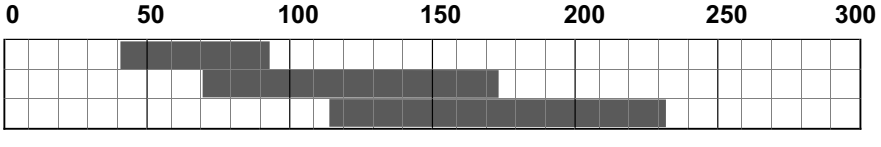

EM 30 G M
EM 45 G M
EM 70 G M
EM 100 G M
EM 150 G M

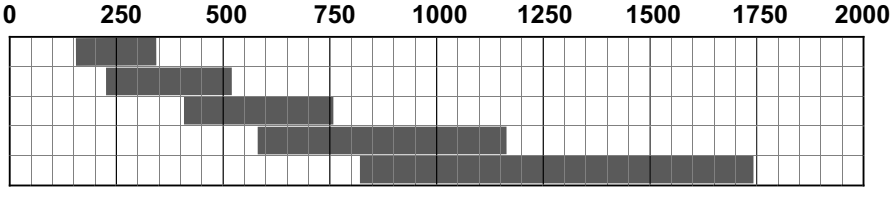

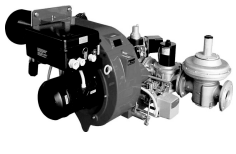

EM 190 G M
EM 250 G M

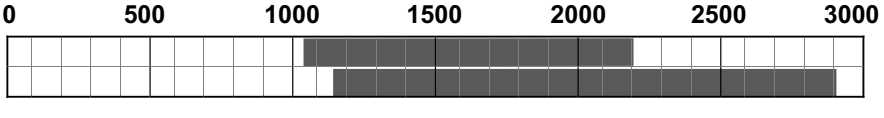

INDEX

EM HEAVY-OIL BURNERS

1 stage from 57 to 284 kW — Pg. 18

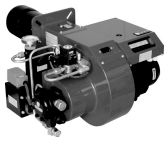

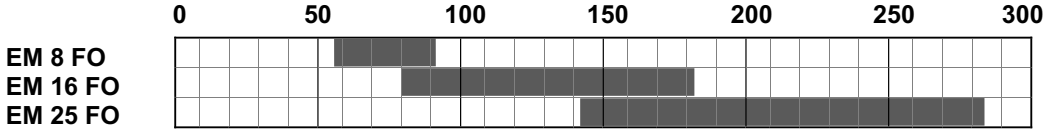

2 stages from 142 to 1.705 kW — Pg. 19

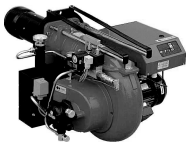

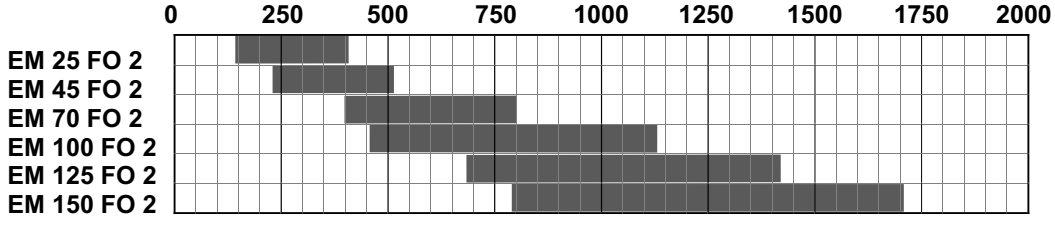

3 stages from 909 to 2.842 kW — Pg. 20

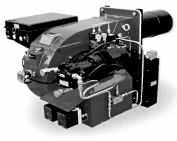

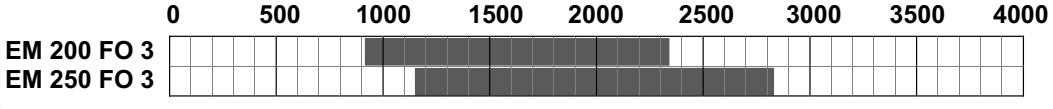

Modulating from 398 to 2.842 kW — Pg. 21

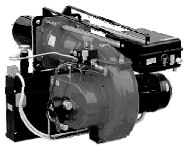

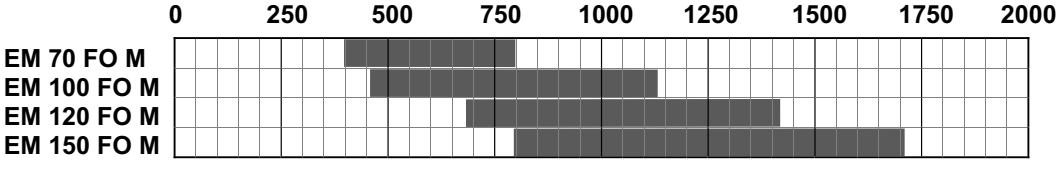

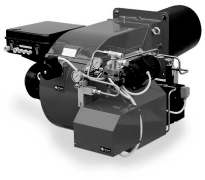

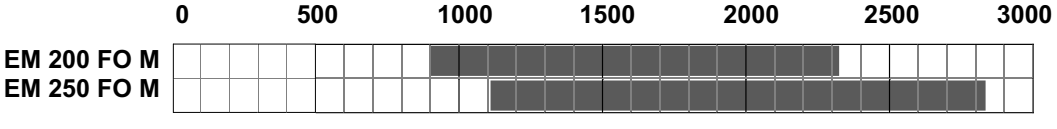

EM DUAL BURNERS GAS-LIGHT OIL

1 stage from 23 to 232 kW — Pg. 23

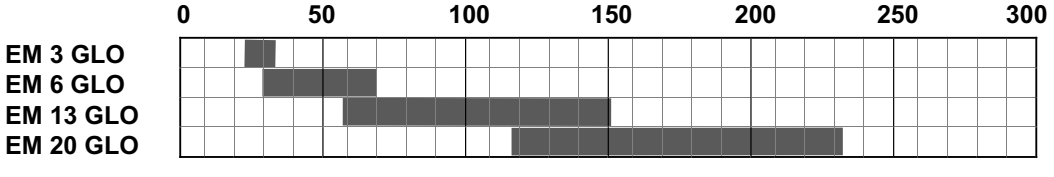

2 stages from 116 to 2.907 kW — Pg. 24

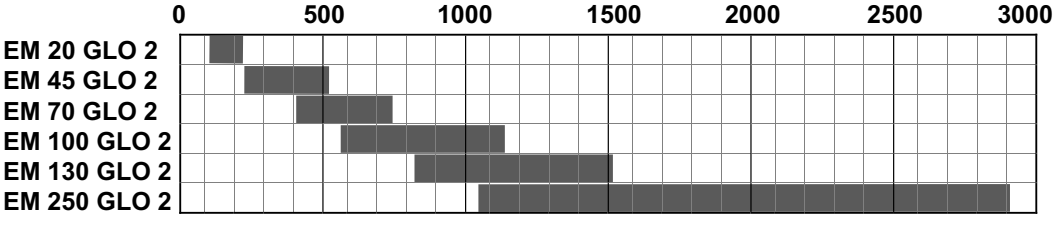

EM-3 LO / EM-5 LO / EM-10 LO
EM-15 LO / EM-20 LO

1 Stage light oil burner from 14 to 236 kW

98/37 CEE Directive Machinery
97/23 CEE Directive equipments to pressure PED
73/23 CEE Directive Low Voltage LV
89/336 CEE Directive Electromagnetic compatibility EMC

Technical description

- Fully automatic compact light oil burner working at one stage. Air regulation is fixed manually in the air flaps, and optionally, by a servomotor.
- The modern conception of the fan wheel and the protecting covering avoids the transmission of noises and vibrations.
- Burner is supplied with the electric control panel incorporated and totally wired.
- Burner is supplied with the nozzle assembled, the light oil connecting flexible pipes and with its oil filter.
- Models **R** incorporate a preheating system in the nozzle.

Burner dimensions

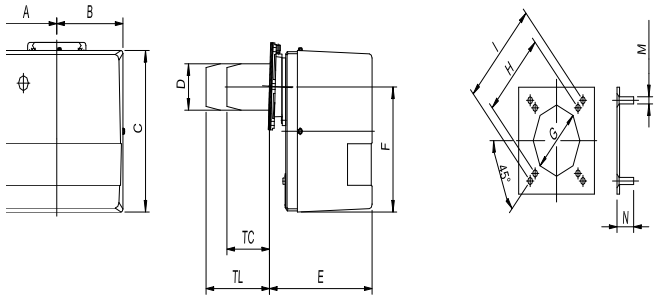

Dimensions EM 3 LO / EM 5 LO / EM 10 LO / EM 15 LO / EM 20 LO

Dimensions in mm

Model	A	B	C	D	E	F	TC	TL	G	H	I	M	N
EM 3 LO (R)	137	137	240	80	215	169	112	152	90	130	160	M8	30
EM 5 LO (R)	157	170	275	80	265	210	112	152	90	130	160	M8	30
EM 10 LO	157	170	275	90	265	210	112	152	100	130	160	M8	30
EM 15 LO	179	189	318	110	298	248	130	250	120	160	226	M10	30
EM 20 LO	179	189	318	125	298	248	130	250	140	160	226	M10	30

Operating range

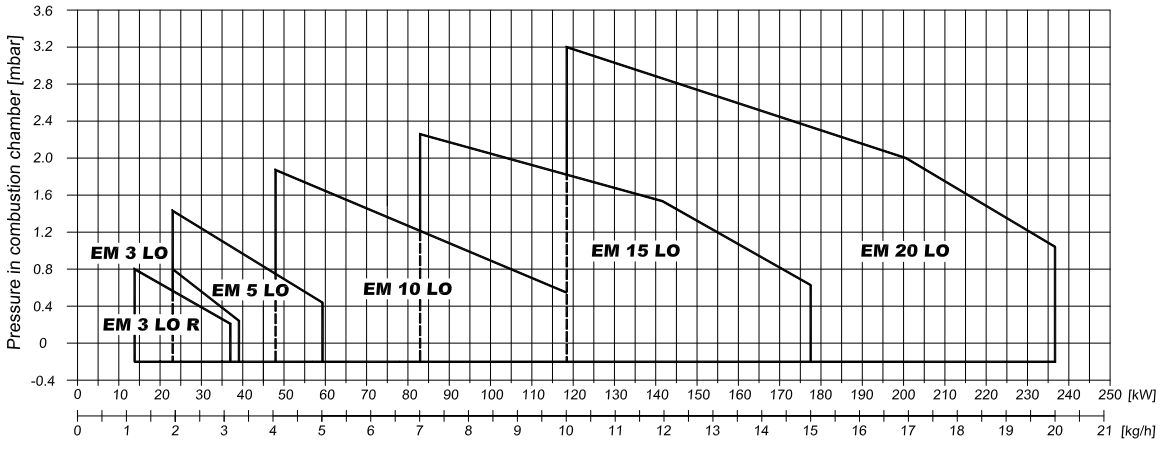

Technical data

Model	EM 3 LOR	EM 3 LO	EM 5 LO	EM 10 LO	EM 15 LO	EM 20 LO
Power [kW] ∗	14,2 - 36,7	23,7 - 39,1	24 - 59	47 - 118	83 - 178	118 - 236
Consumption [kg/h Light Oil] ∗	1,2 – 3,1	2 – 3,3	2 - 5	4 – 10	7 - 15	10 - 20
Pump pressure [bar]	10-12 (Máx. 15)	10-12 (Máx. 15)	10-12 (Máx. 15)	10-12 (Máx. 15)	10-12 (Máx. 15)	10-12 (Máx. 15)
Motor [kW]	0,09	0,09	0,10	0,10	0,15	0,20
Electrical supply [V]	1 x 220 V 50Hz	1 x 220 V 50Hz	1 x 220 V 50Hz	1 x 220 V 50Hz	1 x 220 V 50Hz	1 x 220 V 50Hz
Weight [kg]	12	12	12	13	15	16

∗ viscosity = 1,5º E at 20º C = 6,2 cSt

EM-5LO2 / EM-10LO2
EM-15LO2 / EM-20LO2

2 Stages light oil burner from 24 to 236 kW

98/37 CEE Directive Machinery
97/23 CEE Directive equipments to pressure PED
73/23 CEE Directive Low Voltage LV
89/336 CEE Directive Electromagnetic compatibility EMC

Technical description

- Fully automatic compact light oil burner working at two stages. Air regulation is made by a hydraulic system which is activated when the 2nd oil valve opens.
- The modern conception of the fan wheel and the protecting covering avoids the transmission of noises and vibrations.
- Burner is supplied with the electric control panel incorporated and totally wired.
- Burner is supplied with the nozzle assembled, the light oil connecting flexible pipes and with its oil filter.

Burner dimensions

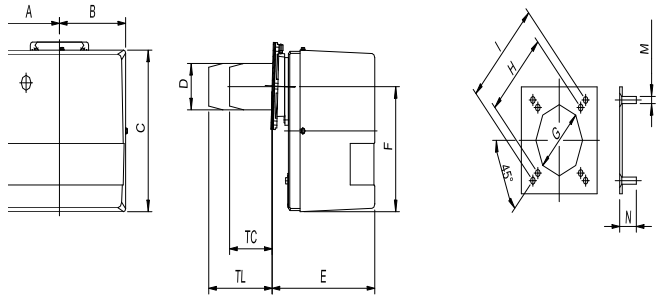

Dimensions EM 5 LO 2 / EM 10 LO 2 / EM 15 LO 2 / EM 20 LO 2

Dimensions in mm

Model	A	B	C	D	E	F	TC	TL	G	H	I	M	N
EM 5 LO 2	157	170	275	80	265	210	112	152	90	130	160	M8	30
EM 10 LO 2	157	170	275	90	265	210	112	152	100	130	160	M8	30
EM 15 LO 2	179	189	318	110	298	248	130	250	120	160	226	M10	30
EM 20 LO 2	179	189	318	125	298	248	130	250	140	160	226	M10	30

Operating range

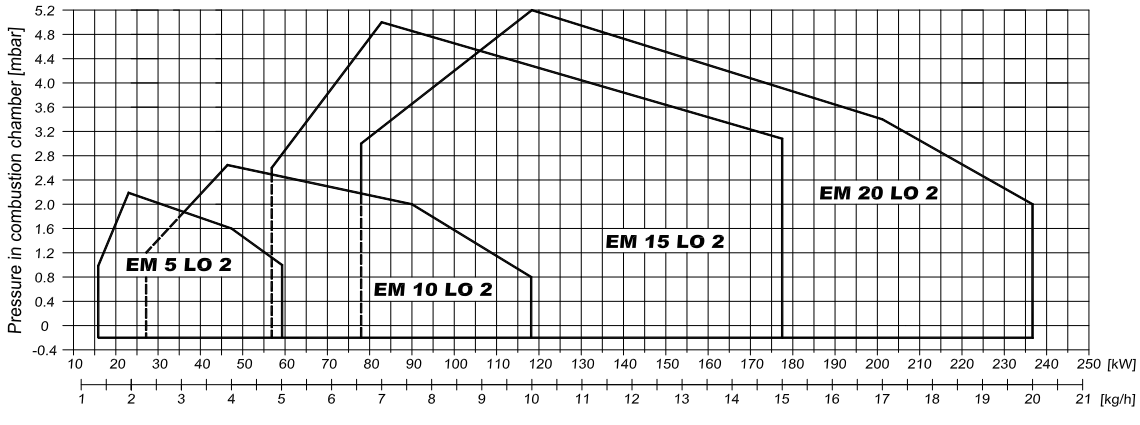

Technical data

Model	EM 5 LO 2	EM 10 LO 2	EM 15 LO 2	EM 20 LO 2
Power [kW] *	17 / 24 - 59	27 / 47 - 118	57 / 83 - 178	78 / 118 - 236
Consumption [kg/h Light Oil] **	1,4 / 2 - 5	2,3 / 4 – 10	4,8 / 7 - 15	6,6 / 10 - 20
Pump pressure [bar]	9 - 18 (Máx. 20)	9 - 18 (Máx. 20)	9 - 18 (Máx. 20)	9 - 18 (Máx. 20)
Motor [kW]	0,10	0,10	0,15	0,20
Electrical supply [V]	1 x 220 V 50Hz	1 x 220 V 50Hz	1 x 220 V 50Hz	1 x 220 V 50Hz
Weight [kg]	12	13	15	16

* Mín. 1st stage / Mín. 2nd stage – Máx. 2nd stage
** viscosity = 1,5º E at 20º C = 6,2 cSt

EM-30 LO2 / EM-50 LO2 / EM-70 LO2
EM-100 LO2 / EM-120 LO2 / EM-150 LO2

2 Stages light oil burner from 153 to 1.740 kW

98/37 CEE Directive Machinery
97/23 CEE Directive equipments to pressure PED
73/23 CEE Directive Low Voltage LV
89/336 CEE Directive Electromagnetic compatibility EMC

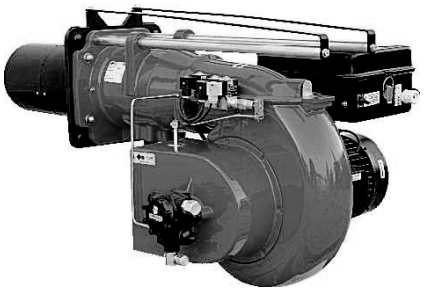

Technical description

- Fully automatic compact light oil burner working at two stages. Air regulation is made by a hydraulic system which is activated when the 2nd oil valve opens.
- The modern conception of the fan wheel and the protecting covering avoids the transmission of noises and vibrations.
- Burner is supplied with the electric control panel incorporated and totally wired.
- Burner is supplied with the nozzle assembled, the light oil connecting flexible pipes and with its oil filter.

Burner dimensions

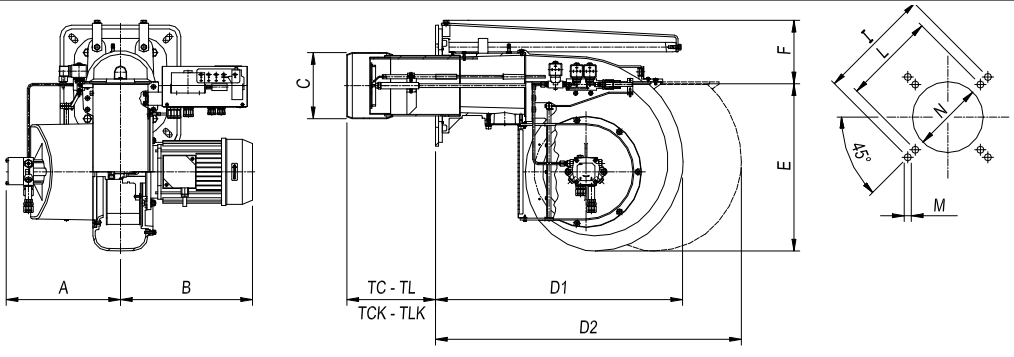

Dimensions EM 30 LO 2 / EM 50 LO 2 / EM 70 LO 2 / EM 100 LO 2 / EM 120 LO 2 / EM 150 LO 2

Dimensions in mm

Model	A	B	C	D1	D2	E	F	TC	TCK	TLK	TL	I	L	M	N
EM 30 LO 2	200	240	130	410	-	251	102	130	-	250	335	226	180	M10	140
EM 50 LO 2	188	324	150	493	-	327	90	250	-	-	335	226	205	M10	160
EM 70 LO 2	250	310	165	660	1.060	327	171	170	250	-	335	368	340	M12	180
EM 100 LO 2	300	350	175	670	1.170	438	173	200	250	385	450	368	340	M12	190
EM 120 LO 2	350	380	212	820	1.400	438	213	200	-	-	400	368	340	M14	230
EM 150 LO 2	350	380	212	820	1.400	438	213	200	-	-	400	368	340	M14	230

Operating range

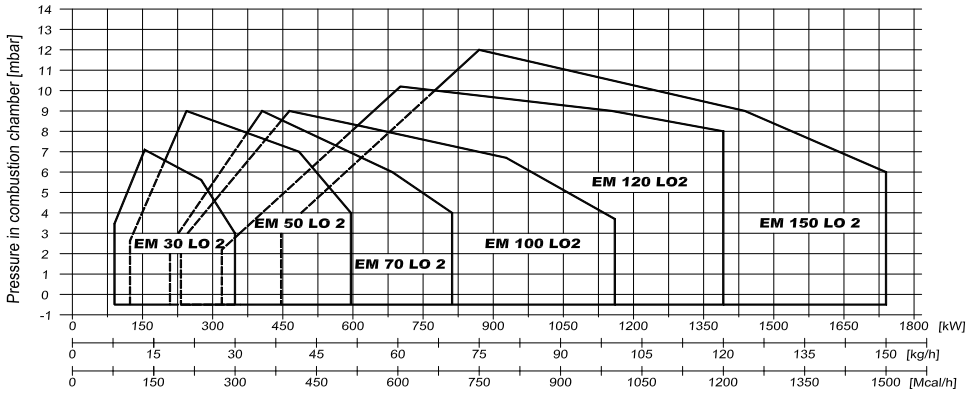

Technical data

Model	EM 30 LO 2	EM 50 LO 2	EM 70 LO 2	EM 100 LO 2	EM 120 LO 2	EM 150 LO 2
Power [kW] ∗	94 / 153 - 355	124 / 237 - 592	209 / 406 - 812	238 / 464 – 1.160	337 / 696 – 1.392	447 / 870 – 1.740
Consumption [kg/h Light Oil] ∗∗	8 / 13 - 30	10,5 / 20 - 50	18 / 35 - 70	20,5 / 40 - 100	29 / 60 - 120	38,5 / 75 - 150
Pump pressure [bar]	10 - 12 (Máx. 15)	10 - 12 (Máx. 15)	10 - 12 (Máx. 15)	10 - 12 (Máx. 15)	10 - 12 (Máx. 15)	10 - 12 (Máx. 15)
Motor [kW]	0,25	0,74	1,1	2,2	3	4
Electrical supply [V]	1 x 220 V 50Hz	3x220/380 V 50Hz	3x220/380 V 50Hz	3x220/380 V 50Hz	3x220/380 V 50Hz	3x220/380 V 50Hz
Weight [kg]	16	32	50	64	84	102

∗ Mín. 1st stage / Mín. 2nd stage – Máx. 2nd stage
∗∗ viscosity = 1,5º E at 20º C = 6,2 cSt

EM-200 LO 3 / EM-250 LO 3

3 Stages light oil burner from 700 to 2.900 kW

98/37 CEE Directive Machinery
97/23 CEE Directive equipments to pressure PED
73/23 CEE Directive Low Voltage LV
89/336 CEE Directive Electromagnetic compatibility EMC

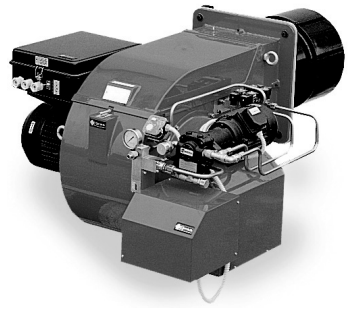

Technical description

- Fully automatic compact light oil burner working at two stages. Air regulation is made by a hydraulic system which is activated when the 2nd and 3rd oil valve opens.
- Independent oil motorpump.
- The modern conception of the fan wheel and the protecting covering avoids the transmission of noises and vibrations.
- Burner is supplied with the electric control panel incorporated and totally wired.
- Burner is supplied with the nozzle assembled, the light oil connecting flexible pipes and with its oil filter.

Burner dimensions

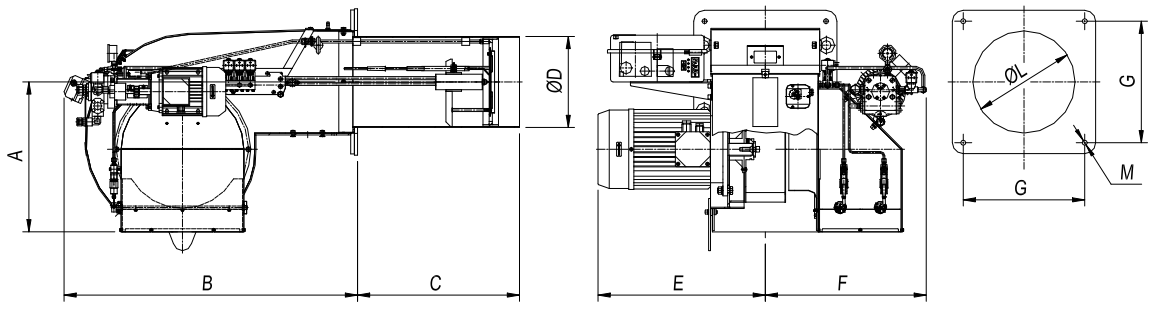

Dimensions EM 200 LO 3 / EM 250 LO 3

Dimensions in mm

Model	A	B	C	ØD	E	F	G	ØL	M
EM 200 LO 3	453	835	495	232	429	429	300	245	M14
EM 250 LO 3	453	835	500	269	429	460	300	280	M14

Operating range

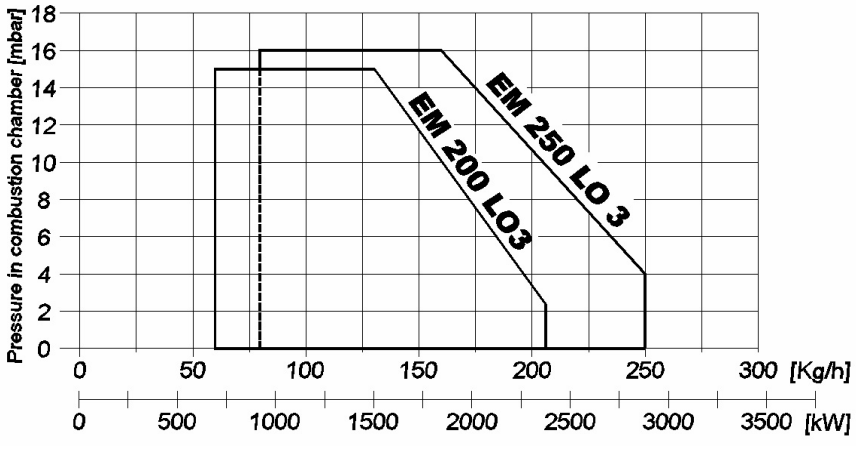

Technical data

Model	EM 200 LO 3	EM 250 LO 3
Power [kW]	700 - 2.390	930 - 2.900
Consumption [kg/h Light Oil] *	60 - 206	80 - 250
Pump pressure [bar]	20 (Máx. 25)	20 (Máx. 25)
Motor [kW]	4	7,5
Electrical supply [V]	0,75	0,75
Weight [kg]	3 x 220/380 V 50Hz	3 x 220/380 V 50Hz

*viscosity = 1,5º E at 20º C = 6,2 cSt

EM-50 LO M / EM-70 LO M / EM-100 LO M
EM-120 LO M / EM-150 LO M

Modulating Light-Oil Burner from 237 to 1.740 kW

98/37 CEE Directive Machinery
97/23 CEE Directive equipments to pressure PED
73/23 CEE Directive Low Voltage LV
89/336 CEE Directive Electromagnetic compatibility EMC

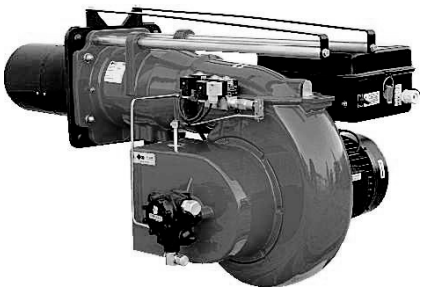

Technical description

- Fully automatic compact light oil burner working in modulating range. Modulation is made by means of a pressure regulator valve in the return piping, it produces a silent ignition, with no explosions. The start power can be until 35% of the nominal.
- The modern conception of the fan wheel and the protecting covering avoids the transmission of noises and vibrations.
- Burner is supplied with the electric control panel incorporated and totally wired.
- Burner is supplied with the nozzle assembled, the light oil connecting flexible pipes and with its oil filter.

Burner dimensions

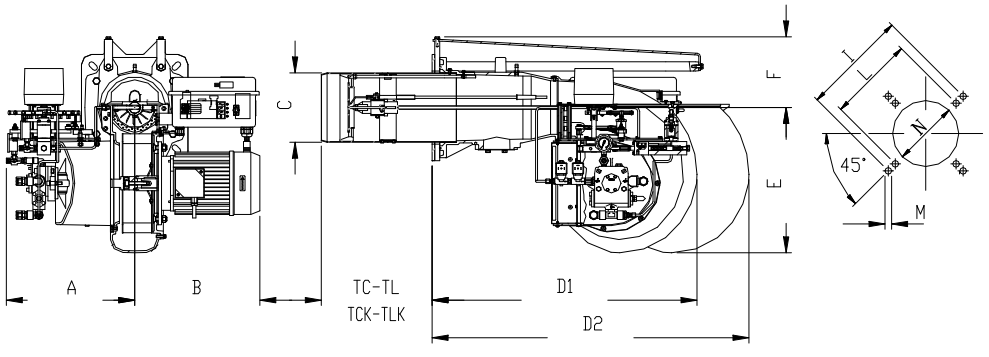

Dimensions EM 50 LO M / EM 70 LO M / EM 100 LO M / EM 120 LO M / EM 150 LO M

Dimensions in mm

Model	A	B	C	D1	D2	E	F	TC	TCK	TLK	TL	I	L	M	N
EM 50 LO M	350	324	150	695	-	327	90	250	-	-	335	226	205	M10	160
EM 70 LO M	350	310	165	700	1.100	327	171	170	250	-	335	368	340	M12	180
EM 100 LO M	400	350	175	700	1.200	438	173	200	250	385	450	368	340	M12	190
EM 120 LO M	450	380	212	820	1.400	438	213	200	-	-	400	368	340	M14	230
EM 150 LO M	450	380	212	820	1.400	438	213	200	-	-	400	368	340	M14	230

Operating range

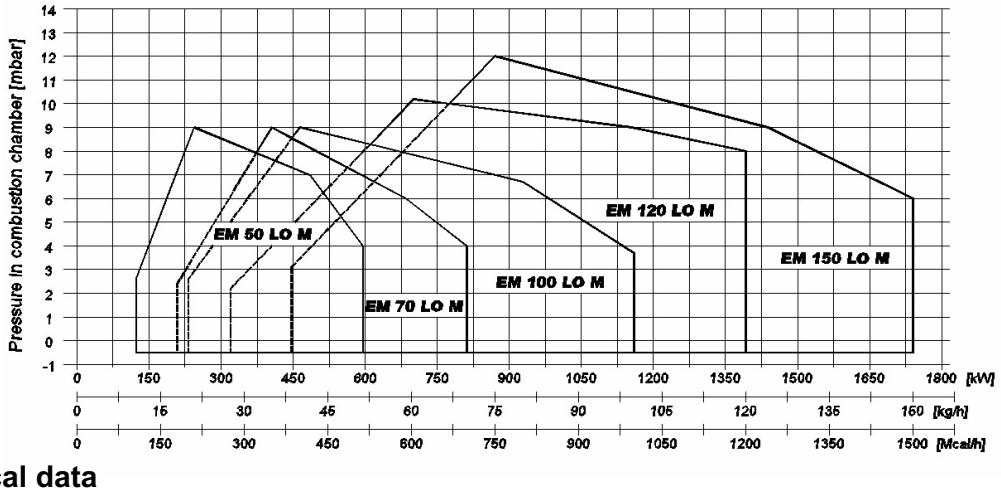

Technical data

Model	EM 50 LO M	EM 70 LO M	EM 100 LO M	EM 120 LO M	EM 150 LO M
Power [kW]	237 - 592	406 - 812	464 – 1.160	696 – 1.392	870 – 1.740
Consumption [kg/h Light Oil] *	20 - 50	35 - 70	40 - 100	60 - 120	75 - 150
Pump pressure [bar]	20 - 25	20 - 25	20 - 25	20 - 25	20 - 25
Motor [kW]	0,74	1,1	2,2	3	4
Electrical supply [V]	3x220/380 V 50Hz	3x220/380 V 50Hz	3x220/380 V 50Hz	3x220/380 V 50Hz	3x220/380 V 50Hz
Weight [kg]	--	--	--	--	--

* viscosity = 1,5º E at 20º C = 6,2 cSt

EM-200 LO M / EM-250 LO M

Modulating Light-Oil Burner from 700 to 2.900 kW

98/37 CEE Directive Machinery
97/23 CEE Directive equipments to pressure PED
73/23 CEE Directive Low Voltage LV
89/336 CEE Directive Electromagnetic compatibility EMC

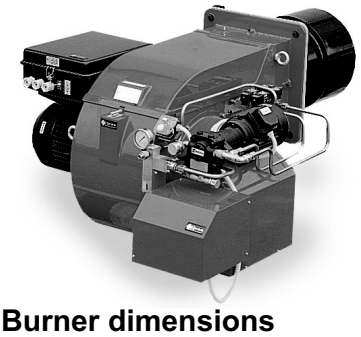

Technical description

- Fully automatic compact light oil burner working in modulating range. Modulation is made by means of a pressure regulator valve in the return piping, it produces a silent ignition, with no explosions. The start power can be until 35% of the nominal.
- Independent oil motorpump.
- The modern conception of the fan wheel and the protecting covering avoids the transmission of noises and vibrations.
- Burner is supplied with the electric control panel incorporated and totally wired.
- Burner is supplied with the nozzle assembled, the light oil connecting flexible pipes and with its oil filter.

Burner dimensions

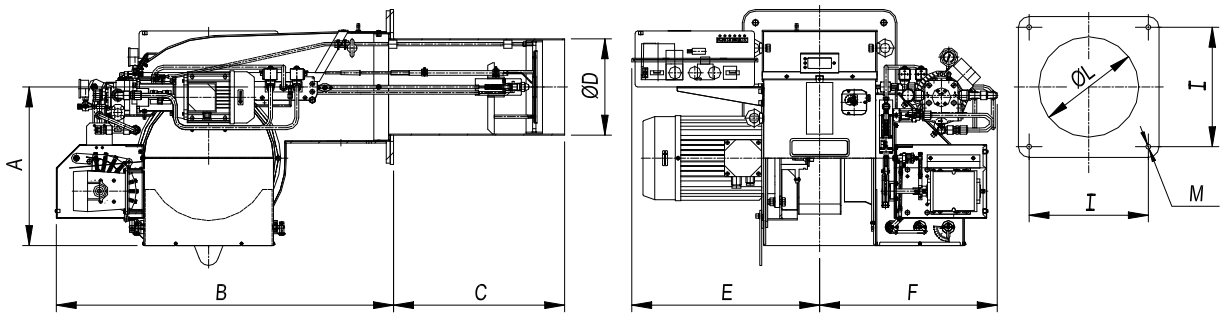

Dimensions EM 200 LO M / EM 250 LO M

Dimensions in mm

Model	A	B	C	ØD	E	F	I	ØL	M
EM 200 LO M	453	920	495	232	430	530	300	245	M14
EM 250 LO M	453	920	500	269	430	530	300	280	M14

Operating range

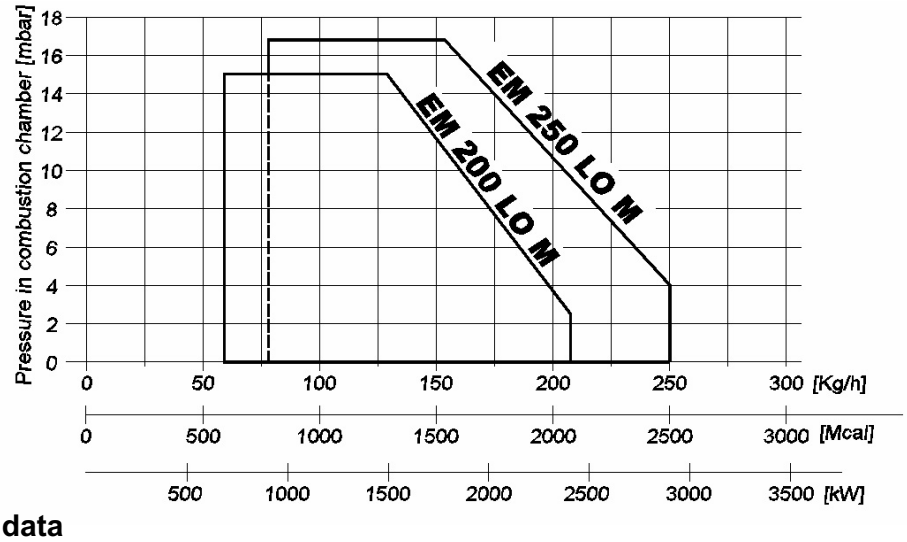

Technical data

Model	EM 200 LO M	EM 250 LO M
Power [kW]	700 – 2.390	930 – 2.900
Consumption [kg/h Light Oil] *	60 - 206	80 - 250
Pump pressure [bar]	25 - 28	25 - 28
Fan Motor [kW]	4	7,5
Pump Motor [kW]	0,75	0,75
Electrical supply [V]	3x220/380 V 50Hz	3x220/380 V 50Hz
Weight [kg]	-	-

* viscosity = 1,5º E at 20º C = 6,2 cSt

EM-3 G / EM-5 G / EM-8 G
EM-15 G / EM-20 G

1 Stage Gas burner from 12 to 232 kW

98/37 CEE Directive Machinery
90/396 CEE Directive Gas Equipments
73/23 CEE Directive Low Voltage LV
89/336 CEE Directive Electromagnetic compatibility EMC

Technical description

- Fully automatic compact gas burner working at one stage. Air regulation is fixed manually in the air flaps. The burner includes the control box, motor, fan, air regulation, a fitting in the combustion head makes it appropriate for any kind of gas.
- Flame detection by ionization probe.
- Fan operation control by air pressure switch.
- Gas train is supplied totally assembled, and composed by:
  - Two gas electrovalves for regulation and security.
  - Minimum gas pressure switch.
  - Gas stabilizer filter.

Burner dimensions

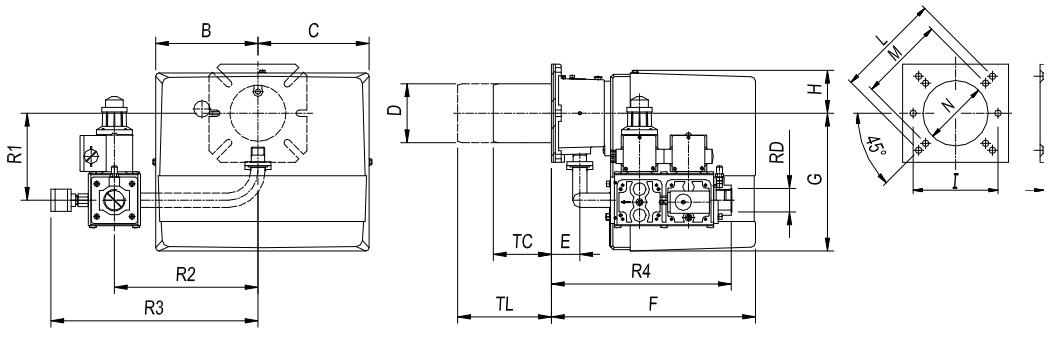

Dimensions EM-3 G / EM-5 G / EM-8 G / EM-15 G / EM-20 G

Dimensions in mm

Model	B	C	D	E	F	G	H	I	L	M	N	O	P	TC	TL	R1	R2	R3	R4
EM-3 G	137	137	90	45	265	169	72	130	160	130	100	30	M8	85	145	128	200	254	244
EM-5 G	157	170	90	45	313	210	65	130	160	130	100	30	M8	85	145	128	200	254	244
EM-8 G	157	170	90	45	313	210	65	130	160	130	100	30	M8	85	145	133	220	318	275
EM-15 G	185	195	108	52	340	248	70	160	170	150	120	30	M8	130	250	168	280	378	308
EM-20 G	185	195	125	78	368	248	70	-	226	205	135	40	M10	160	280	173	280	378	334

Operating range

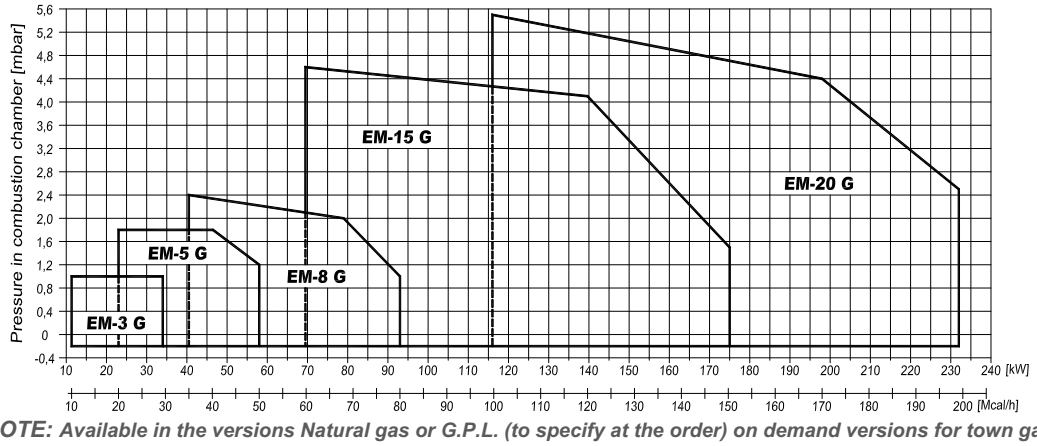

***NOTE:** Available in the versions Natural gas or G.P.L. (to specify at the order) on demand versions for town gas, coal gas or biogas.*

Technical data

Model	EM-3 G	EM-5 G	EM-8 G	EM-15 G	EM-20 G
Power [kW]	11,5 - 34	23 - 58	40,5 - 93	70 - 174	116 - 232
Max. Consumption [Nm^3/h N. G.]	1,2 - 3,4	2,3 - 5,8	4,1 - 9,4	7 - 17,4	11,6 - 23,2
Min. Input P. ramp N. G. [mbar]	11	16	17	20	26
Consumption [Nm^3/h L.P.G.]	0,5 - 1,3	0,9 - 2,3	1,6 - 3,6	2,7 - 6,5	4,5 - 9
Min. Input P. ramp L.P.G. [mbar]	18	31	28	32	23
Motor [kW]	0,050	0,075	0,075	0,11	0,20
Gas Ramp (RD)	R ½"	R ½"	R ¾" - FS 25	R 1" - FS 25	R 1" - FS 25
Electrical supply [V]			1 x 220 V 50Hz		
Weight [kg]	12	12	12	13	14

EM-30 G / EM-45 G

1 Stage Gas burner from 151 to 522 kW

98/37 CEE Directive Machinery
90/396 CEE Directive Gas Equipments
73/23 CEE Directive Low Voltage LV
89/336 CEE Directive Electromagnetic compatibility EMC

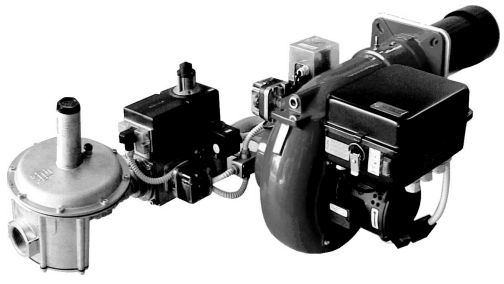

Technical description

- Fully automatic compact gas burner working at one stage. Air regulation is fixed manually in the air flaps. The burner includes the control box, motor, fan, air regulation, a fitting in the combustion head makes it appropriate for any kind of gas.
- Flame detection by ionization probe.
- Fan operation control by air pressure switch.
- Gas train is supplied totally assembled, and composed by:
  - Two gas electrovalves for regulation and security.
  - Minimum gas pressure switch.
  - Gas stabilizer filter.

Burner dimensions

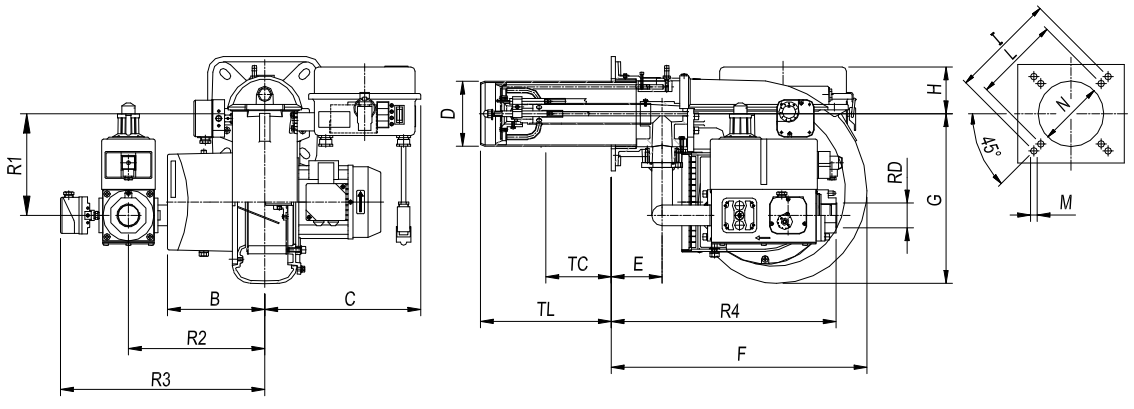

Dimensions EM-30 G / EM-45 G

Dimensions in mm

Model	B	C	D	E	F	G	H	I	L	M	N	TC	TL	R1	R2	R3	R4
EM-30 G	188	301	138	98	493	327	90	226	205	10	148	250	335	203	280	420	456
EM-45 G	188	301	150	98	493	327	90	226	205	10	160	250	335	203	280	420	456

Operating range

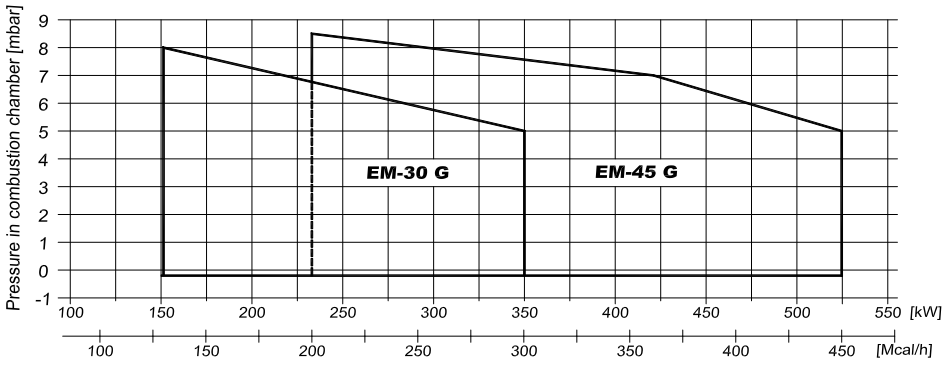

⚠ ***NOTE:*** ***Available in the versions Natural gas or G.P.L. (to specify at the order) on demand versions for town gas, coal gas or biogas.***

Technical data

Model	EM-30 G	EM-45 G
Power [kW]	151 - 348	232 - 522
Max. Consumption [Nm^3/h N. G.]	15,2 - 35	23,4 - 52,6
Min. Input P. ramp N. G. [mbar]	30	17
Consumption [Nm^3/h L.P.G.]	5,8 - 13,5	9 - 20,3
Min. Input P. ramp L.P.G. [mbar]	27	18
Motor [kW]	0,37	0,74
Gas Ramp (RD)	R 1” - FS 32	R 1 ½” - FS 40
Electrical supply [V]	1 x 220 V 50Hz	3 x 220/380 V 50Hz
Weight [kg]	28	30

EM-5 G2 / EM-8 G2
EM-15 G2 / EM-20 G2

2 Stages Gas burner from 23 to 232 kW

98/37 CEE Directive Machinery
90/396 CEE Directive Gas Equipments
73/23 CEE Directive Low Voltage LV
89/336 CEE Directive Electromagnetic compatibility EMC

Technical description

- Fully automatic compact gas burner working at two stages. Air regulation is fixed by a servomotor. The burner includes the control box, motor, fan, air regulation, a fitting in the combustion head makes it appropriate for any kind of gas.
- Flame detection by ionization probe.
- Fan operation control by air pressure switch.
- Gas train is supplied totally assembled, and composed by:
  - Two gas electrovalves for regulation and security.
  - Minimum gas pressure switch.
  - Gas stabilizer filter.

Burner dimensions

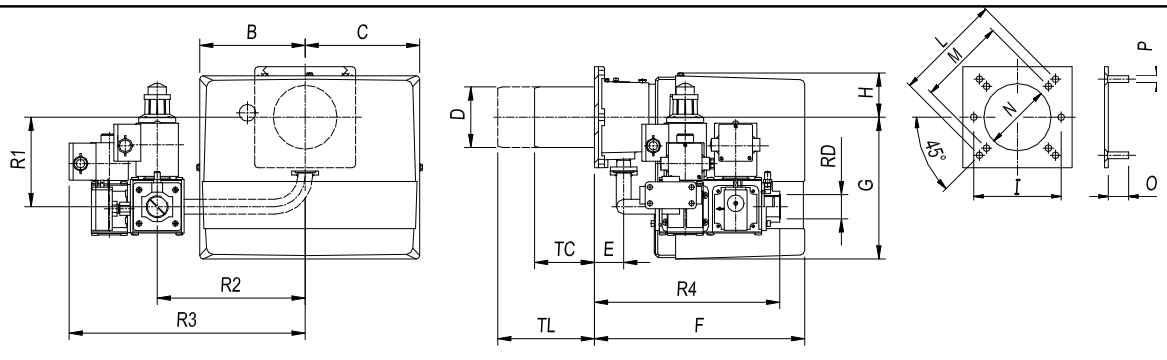

Dimensions EM-5 G2 / EM-8 G2 / EM-15 G2 / EM-20 G2

Dimensions in mm

Model	B	C	D	E	F	G	H	I	L	M	N	O	P	TC	TL	R1	R2	R3	R4
EM-5 G2	158	171	90	43	305	211	63	130	160	130	100	30	M8	89	149	133	200	275	258
EM-8 G2	158	171	90	43	305	211	63	130	160	130	100	30	M8	89	149	138	220	351	275
EM-15 G2	179	189	107	52	339	248	70	160	170	150	120	30	M8	134	254	168	280	411	308
EM-20 G2	179	189	125	78	369	248	70	-	226	170	135	40	M10	163	283	173	280	411	334

Operating range

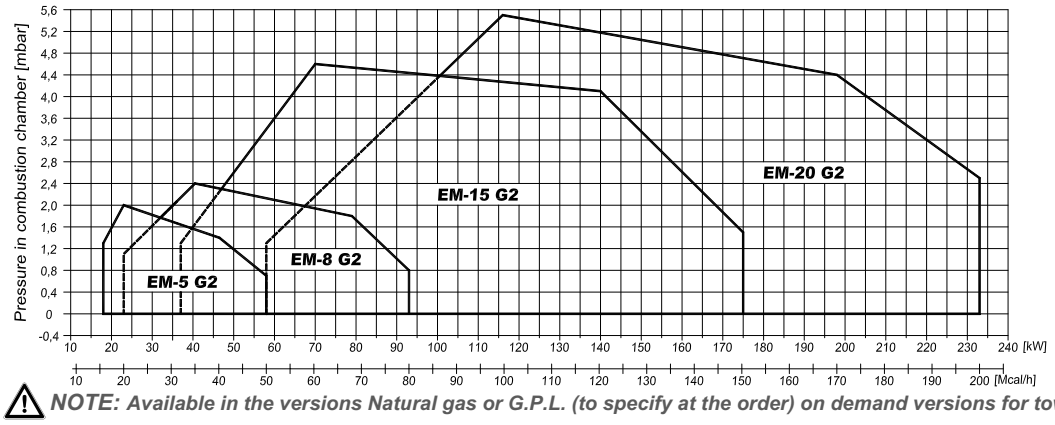

⚠ ***NOTE: Available in the versions Natural gas or G.P.L. (to specify at the order) on demand versions for town gas, coal gas or biogas.***

Technical data

Model	EM-5 G2	EM-8 G2	EM-15 G2	EM-20 G2
Power [kW] *	18 / 23 - 58	24 / 41 - 93	35 / 70 - 174	64 / 116 - 232
Max. Consumption [Nm^3/h N. G.]	1,8 / 2,3 - 5,8	2,5 / 4,1 - 9,4	3,5 / 7 - 17,4	6,4 / 11,6 - 23,2
Min. Input P. ramp N. G. [mbar]	16	17	20	26
Consumption [Nm^3/h L.P.G.]	0,7 / 0,9 - 2,3	0,9 / 1,6 - 3,6	1,3 / 2,7 - 6,5	2,5 / 4,5 - 9
Min. Input P. ramp L.P.G. [mbar]	31	25	32	23
Motor [kW]	0,075	0,075	0,11	0,20
Gas Ramp (RD)	R ½"	R ¾" - FS 25	R 1" - FS 25	R 1" - FS 25
Electrical supply [V]	1 x 220 V 50Hz			
Weight [kg]	12	12	13	14

∗ Min. 1st. Stage / Min. 2nd. Stage - Max. 2nd. Stage

EM-30 G2 / EM-45 G2 / EM-70 G2
EM-100 G2 / EM-150 G2

2 Stages Gas burner from 151 to 1.744 kW

98/37 CEE Directive Machinery
90/396 CEE Directive Gas Equipments
73/23 CEE Directive Low Voltage LV
89/336 CEE Directive Electromagnetic compatibility EMC

Technical description

- Fully automatic compact gas burner working at two stages. Air regulation is fixed by a servomotor. The burner includes the control box, motor, fan, air regulation, a fitting in the combustion head makes it appropriate for any kind of gas.
- Flame detection by ionization probe.
- Fan operation control by air pressure switch.
- Gas train is supplied totally assembled, and composed by:
  - Two gas electrovalves for regulation and security.
  - Minimum gas pressure switch.
  - Gas stabilizer filter.

Burner dimensions

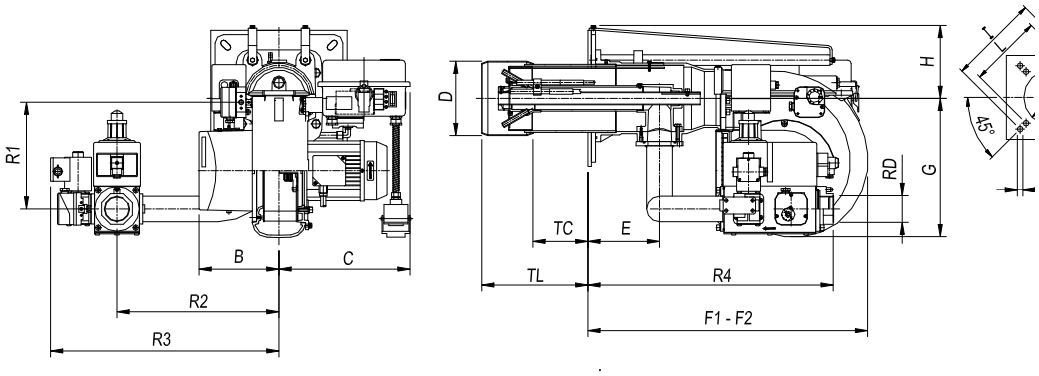

Dimensions EM-30 G2 / EM-45 G2 / EM-70 G2 / EM-100 G2 / EM-150 G2

Dimensions in mm

Model	B	C	D	E	F1	F2	G	H	I	L	M	N	TC	TL	R1	R2	R3	R4
EM-30 G2	188	301	138	98	493	--	327	90	226	205	10	148	250	335	203	280	432	456
EM-45 G2	188	301	150	98	493	--	327	90	226	205	10	160	250	335	203	280	432	456
EM-70 G2	188	308	175	168	660	1100	327	171	368	340	12	185	250	385	260	380	536	576
EM-100 G2	238	372	185	184	660	1160	438	173	368	340	12	195	250	385	260	380	536	591
EM-150 G2	238	372	210	193	800	1380	438	213	368	340	14	220	280	400	285	380	536	600

Operating range

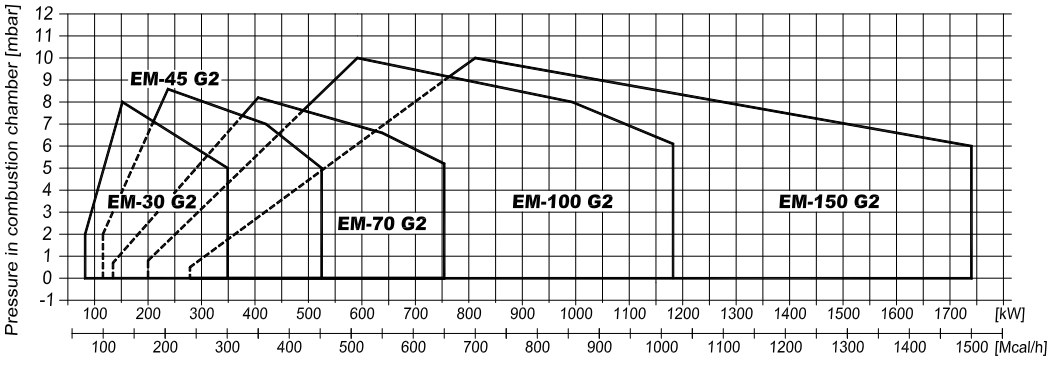

***NOTE:** Available in the versions Natural gas or G.P.L. (to specify at the order) on demand versions for town gas, coal gas or biogas.*

Technical data

Model	EM-30 G2	EM-45 G2	EM-70 G2	EM-100 G2	EM-150 G2
Power [kW] *	81,2 / 151 - 348	116 / 232 - 522	135 / 406 - 754	200 / 580 - 1160	279 / 814 - 1744
Max. Consumption [Nm^3/h N. G.]	8,2 / 15,2 - 35	11,7 / 23,4 - 52,6	13,5 / 41 - 76	20 / 58,4 - 117	28 / 81,7 - 175,2
Min. Input P. ramp N. G. [mbar]	30	17	29	59	60
Consumption [Nm^3/h L.P.G.]	3,2 / 5,8 - 13,5	4,5 / 9 - 20,3	5,2 / 15,7 - 29,3	7,8 / 22,6 - 45,2	10,8 / 31,6 - 67,8
Min. Input P. ramp L.P.G. [mbar]	27	18	21	37	43
Motor [kW]	0,37	0,74	1,1	2,2	3
Gas Ramp (RD)	R 1" - FS 32	R 1 ½" - FS 40	R 1 ½" - FS 50	R 1 ½" - FS 50	R 2" - FS 50
Electrical supply [V]	1x220 V 50Hz	3x220/380 V 50Hz	3x220/380 V 50Hz	3x220/380 V 50Hz	3x220/380 V 50Hz
Weight [kg]	28	30	45	65	85

* Min. 1st. Stage / Min. 2nd. Stage - Max. 2nd. Stage

EM-190 G2 / EM-250 G2

2 Stages Gas burner from 1.044 to 2.900 kW

98/37 CEE Directive Machinery
90/396 CEE Directive Gas Equipments
73/23 CEE Directive Low Voltage LV
89/336 CEE Directive Electromagnetic compatibility EMC

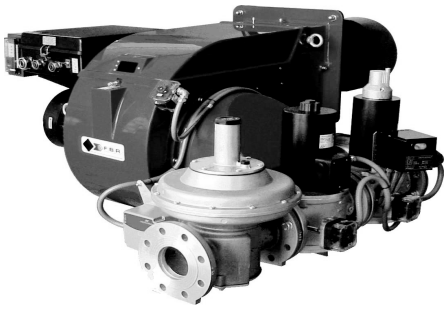

Technical description

- Fully automatic compact gas burner working at two stages. Air regulation is fixed by a servomotor. The burner includes the control box, motor, fan, air regulation, a fitting in the combustion head makes it appropriate for any kind of gas.
- Flame detection by ionization probe.
- Fan operation control by air pressure switch.
- Gas train is supplied totally assembled, and composed by:
  - Two gas electrovalves for regulation and security.
  - Minimum gas pressure switch.
  - Gas stabilizer filter.

Burner dimensions

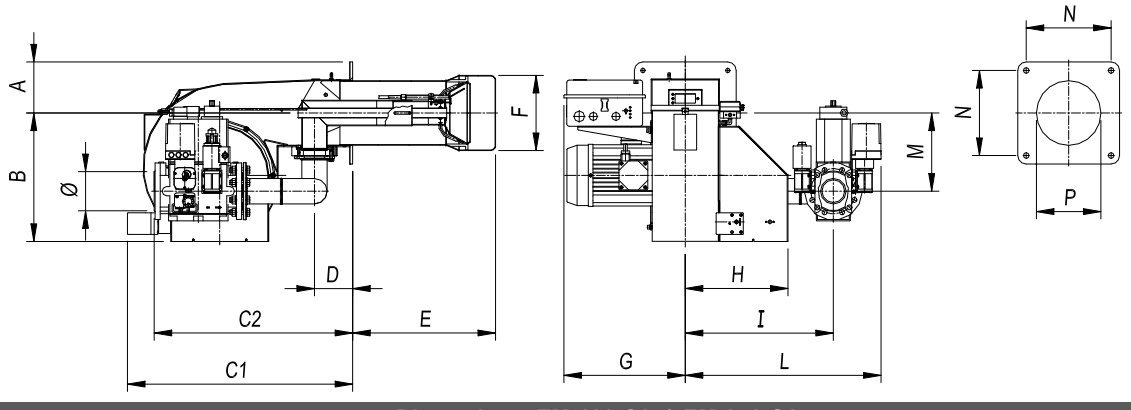

Dimensions EM-190 G2 / EM-250 G2

Dimensions in mm

Model	A	B	C1	C2	D	E	F	G	H	I	L	M	N	P	R	S	Ø
EM-190 G2	180	453	806	524	145	500	265	430	363	520	684	275	300	280	M14	50	R 2”
EM-250 G2	180	453	806	708	145	500	270	430	363	520	688	275	300	280	M14	50	DN 65

Operating range

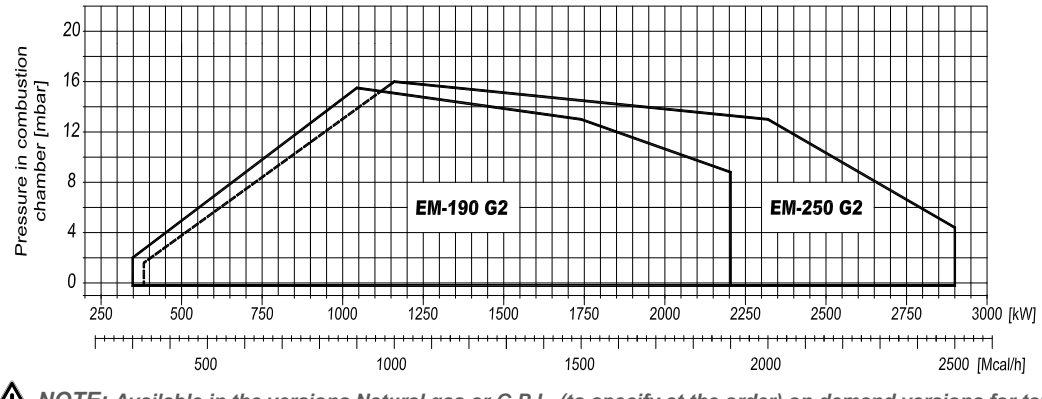

***NOTE:** Available in the versions Natural gas or G.P.L. (to specify at the order) on demand versions for town gas, coal gas or biogas.*

Technical data

Model	EM-190 G2	EM-250 G2
Power [kW] *	348 / 1044 - 2204	383 / 1160 - 2900
Max. Consumption [Nm^3/h N. G.]	35 / 105 - 222	39 / 117 - 292
Min. Input P. ramp N. G. [mbar]	97	76
Consumption [Nm^3/h L.P.G.]	14 / 41 - 86	15 / 45 - 113
Min. Input P. ramp L.P.G. [mbar]	42	45
Motor [kW]	4	5,5
Gas Ramp (RD)	R 2” - FS 50	DN 65 – FS 65
Electrical supply [V]	3 x 220/380 V 50Hz	3 x 220/380 V 50Hz
Weight [kg]	--	--

* Min. 1st. Stage / Min. 2nd. Stage - Max. 2nd. Stage

EM-8 GM / EM-15 GM
EM-20 GM

Modulating Gas burner
from 41 to 232 kW

98/37 CEE Directive Machinery
90/396 CEE Directive Gas Equipments
73/23 CEE Directive Low Voltage LV
89/336 CEE Directive Electromagnetic compatibility EMC

Technical description

- Fully automatic compact gas burner working in modulating range. Air regulation is fixed by a servomotor. The burner includes the control box, motor, fan, air regulation, a fitting in the combustion head makes it appropriate for any kind of gas.
- Flame detection by ionization probe.
- Fan operation control by air pressure switch.
- Gas train is supplied totally assembled, and composed by:
  - Two gas electrovalves for regulation and security.
  - Minimum gas pressure switch.
  - Gas stabilizer filter.

Burner dimensions

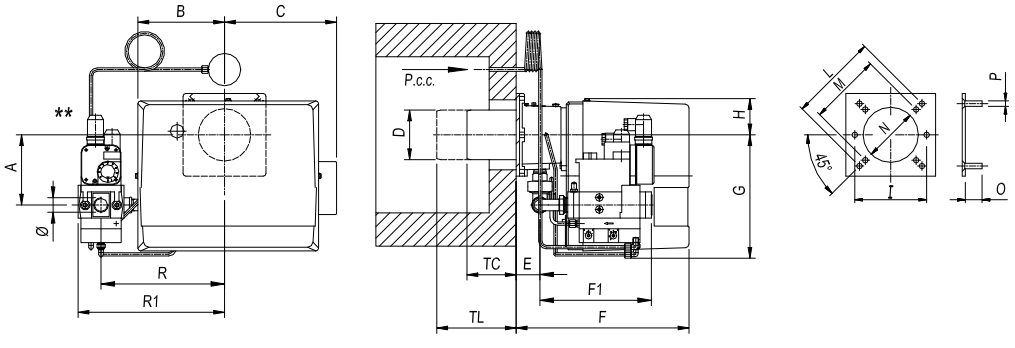

Dimensions EM-8 GM / EM-15 GM / EM-20 GM

Dimensions in mm

Model	A	B	C	D	E	F	F1	G	H	I	L	M	N	O	P	TC	TL	R	R1	Ø
EM-8 GM	178	160	200	90	43	305	232	220	65	130	160	130	100	30	M8	85	145	220	318	R ¾”
EM-15 GM	228	179	224	107	54	341	232	270	70	160	170	150	120	30	M8	130	250	280	378	R 1”
EM-20 GM	233	179	224	125	78	369	256	275	70	--	226	170	135	40	M10	160	280	280	378	R 1”

Operating range

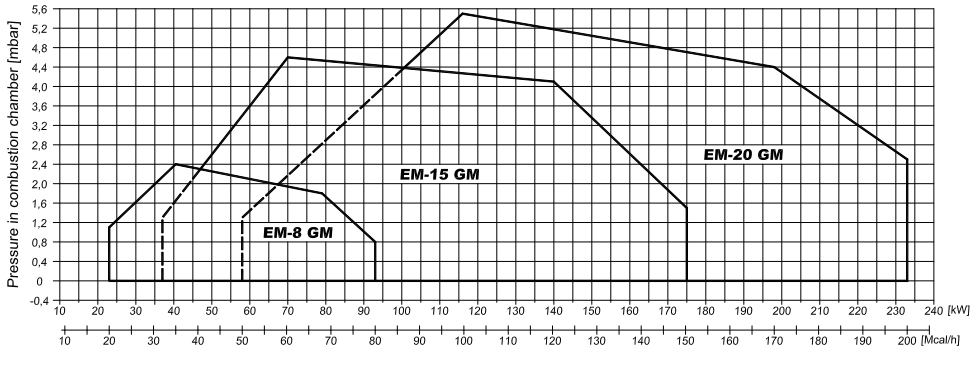

⚠ ***NOTE:** Available in the versions Natural gas or G.P.L. (to specify at the order) on demand versions for town gas, coal gas or biogas.*

Technical data

Model	EM-8 GM	EM-15 GM	EM-20 GM
Power [kW]	41 - 93	70 - 174	116 - 232
Max. Consumption [Nm^3/h N. G.]	4,1 - 9,4	7 – 17,4	11,6 – 23,2
Min. Input P. ramp N. G. [mbar]	17	19	26
Consumption [Nm^3/h L.P.G.]	1,6 - 3,6	2,7 – 6,5	4,5 - 9
Min. Input P. ramp L.P.G. [mbar]	28	32	23
Motor [kW]	0,075	0,11	0,11
Gas Ramp (RD)	R ¾” – FS 25	R 1” – FS 25	R 1” – FS 25
Electrical supply [V]		1 x 220 V 50Hz	
Weight [kg]	12	13	14

EM-30 GM / EM-45 GM / EM-70 GM
EM-100 GM / EM-150 GM

Modulating Gas burner from 151 to 1.744 kW

98/37 CEE Directive Machinery
90/396 CEE Directive Gas Equipments
73/23 CEE Directive Low Voltage LV
89/336 CEE Directive Electromagnetic compatibility EMC

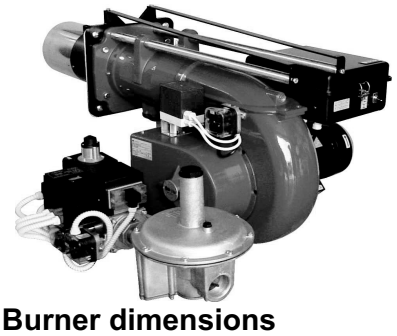

Technical description

- Fully automatic compact gas burner working in modulating range. Air regulation is fixed by a servomotor. The burner includes the control box, motor, fan, air regulation, a fitting in the combustion head makes it appropriate for any kind of gas.
- Flame detection by ionization probe.
- Fan operation control by air pressure switch.
- Gas train is supplied totally assembled, and composed by:
  - Two gas electrovalves for regulation and security.
  - Minimum gas pressure switch.
  - Gas stabilizer filter.

Burner dimensions

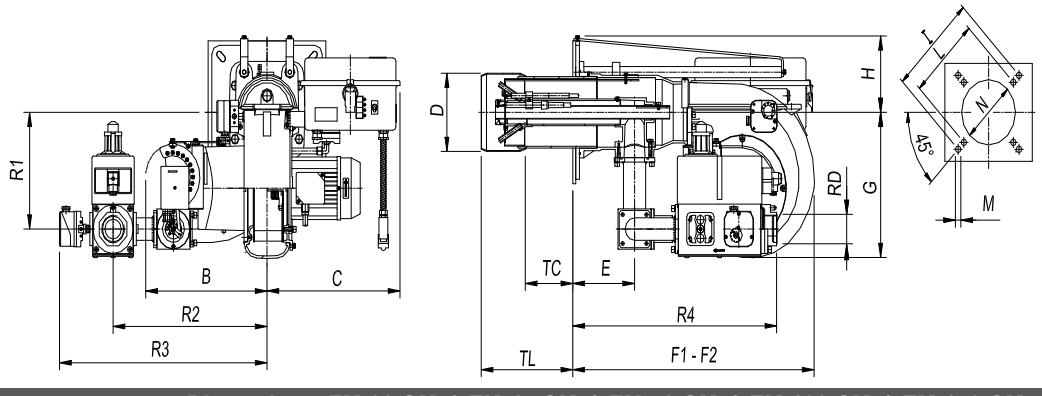

Dimensions EM-30 GM / EM-45 GM / EM-70 GM / EM-100 GM / EM-150 GM

Dimensions in mm

Model	B	C	D	E	F1	F2	G	H	I	L	M	N	TC	TL	R1	R2	R3	R4
EM-30 GM	331	301	138	98	493	--	327	90	226	205	10	148	250	335	203	411	550	470
EM-45 GM	331	301	150	98	493	--	327	90	226	205	10	160	250	335	203	411	550	470
EM-70 GM	331	362	175	168	660	1100	327	171	368	340	12	185	250	385	262	415	580	538
EM-100 GM	376	372	185	184	660	1100	438	173	368	340	12	195	250	385	262	460	625	554
EM-150 GM	376	372	210	193	816	1396	438	213	368	340	14	220	280	400	228	460	625	602

Operating range

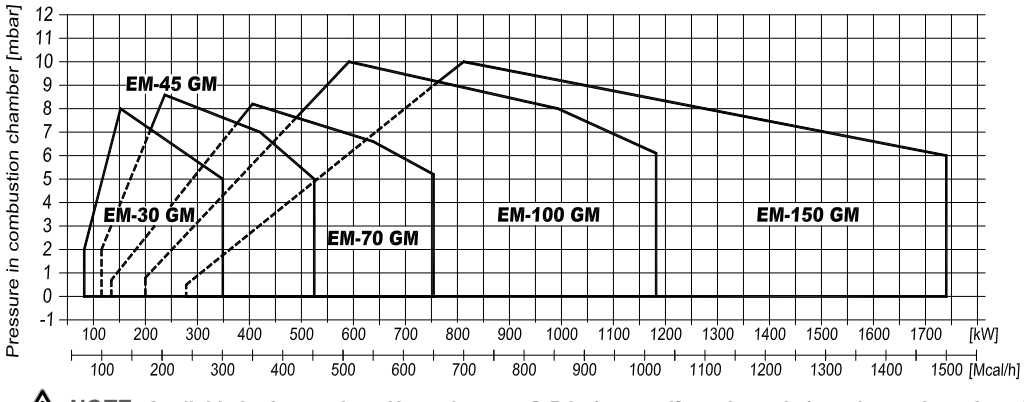

***NOTE:** Available in the versions Natural gas or G.P.L. (to specify at the order) on demand versions for town gas, coal gas or biogas.*

Technical data

Model	EM-30 GM	EM-45 GM	EM-70 GM	EM-100 GM	EM-150 GM
Power [kW]	151 - 348	232 - 522	406 - 754	580 - 1160	814 - 1744
Max. Consumption [Nm^3/h N. G.]	15,2 - 35	23,4 - 52,6	41 - 76	58,4 - 117	81,7 - 175,2
Min. Input P. ramp N. G. [mbar]	31	17	29	59	60
Consumption [Nm^3/h L.P.G.]	5,8 - 13,5	9 - 20,3	15,7 - 29,3	22,6 - 45,2	31,6 - 67,8
Min. Input P. ramp L.P.G. [mbar]	27	21	27	37	43
Motor [kW]	0,37	0,74	1,1	2,2	3
Gas Ramp (RD)	R 1" - FS 32	R 1 ½" - FS 40	R 1 ½" - FS 50	R 1 ½" - FS 50	R 2" - FS 50
Electrical supply [V]	1x220 V 50Hz	3x220/380 V 50Hz	3x220/380 V 50Hz	3x220/380 V 50Hz	3x220/380 V 50Hz
Weight [kg]	28	30	45	65	85

EM-190 GM / EM-250 GM

Modulating Gas burner from 1.044 to 2.900 kW

98/37 CEE Directive Machinery
90/396 CEE Directive Gas Equipments
73/23 CEE Directive Low Voltage LV
89/336 CEE Directive Electromagnetic compatibility EMC

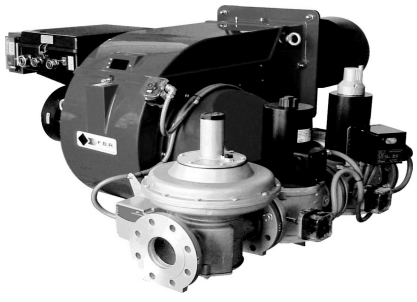

Technical description

- Fully automatic compact gas burner working in modulating range. Air regulation is fixed by a servomotor. The burner includes the control box, motor, fan, air regulation, a fitting in the combustion head makes it appropriate for any kind of gas.
- Flame detection by ionization probe.
- Fan operation control by air pressure switch.
- Gas train is supplied totally assembled, and composed by:
  - Two gas electrovalves for regulation and security.
  - Minimum gas pressure switch.
  - Gas stabilizer filter.

Burner dimensions

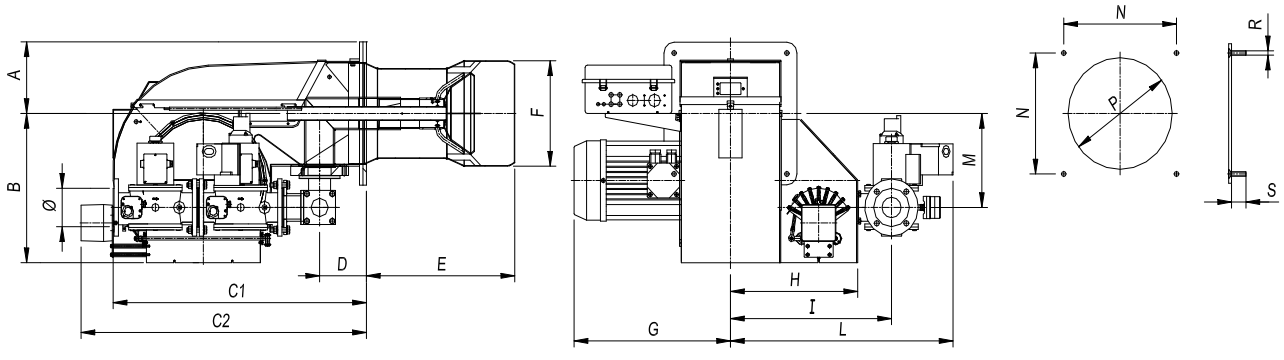

Dimensions EM-190 GM / EM-250 GM

Dimensions in mm

Model	A	B	C1	C2	D	E	F	G	H	I	L	M	N	P	R	S	Ø
EM-190 GM	180	453	504	934	145	500	265	430	363	509	673	254	300	280	M14	50	R 2”
EM-250 GM	180	453	859	934	145	500	270	430	363	480	693	254	300	280	M14	50	DN 65

Operating range

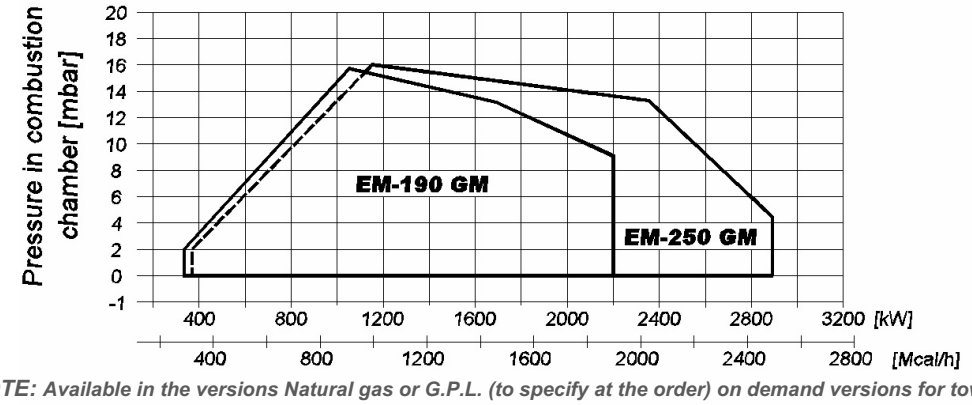

⚠ ***NOTE:** Available in the versions Natural gas or G.P.L. (to specify at the order) on demand versions for town gas, coal gas or biogas.*

Technical data

Model	EM-190 GM	EM-250 GM
Power [kW]	1.044 – 2.209	1.160 – 2.900
Max. Consumption [Nm^3/h N. G.]	105 - 222	117 - 292
Min. Input P. ramp N. G. [mbar]	97	76
Consumption [Nm^3/h L.P.G.]	41 – 86	45 – 113
Min. Input P. ramp L.P.G. [mbar]	42	45
Motor [kW]	5,5	5,5
Gas Ramp (RD)	R 2”	DN 65
Electrical supply [V]	3x220/380 V 50Hz	3x220/380 V 50Hz
Weight [kg]	--	--

EM-8 FO / EM-16 FO / EM-25 FO

1 Stage Heavy-oil Burner from 57 to 284 kW

98/37 CEE Directive Machinery
97/23 CEE Directive equipments to pressure PED
73/23 CEE Directive Low Voltage LV
89/336 CEE Directive Electromagnetic compatibility EMC

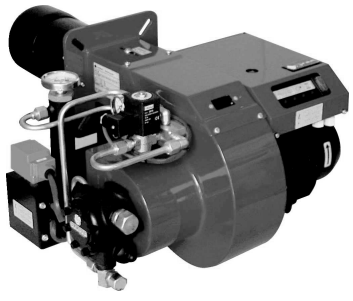

Technical description

- Fully automatic compact heavy oil burner working at one stage. Air regulation is fixed manually in the air flaps.
- Preheating system equipped with low density thermical resistances.
- The modern conception of the fan wheel and the protecting covering avoids the transmission of noises and vibrations.
- Burner is supplied with the electric control panel incorporated and totally wired.
- Burner is supplied with the nozzle assembled, the heavy oil connecting flexible pipes and with its oil filter.

Burner dimensions

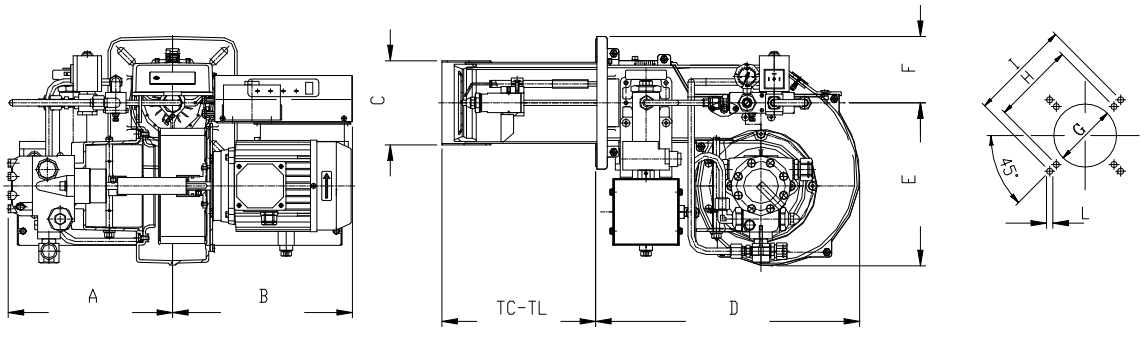

Dimensions EM 8 FO / EM 16 FO / EM 25 FO

Dimensions in mm

Model	A	B	C	D	E	F	G	H	I	L	TC	TL
EM 8 FO 2	253	280	107	410	251	102	120	180	226	10	120	240
EM 16 FO 2	253	280	107	410	251	102	120	180	226	10	120	240
EM 25 FO 2	253	280	130	410	251	102	140	180	226	10	120	240

Operating range

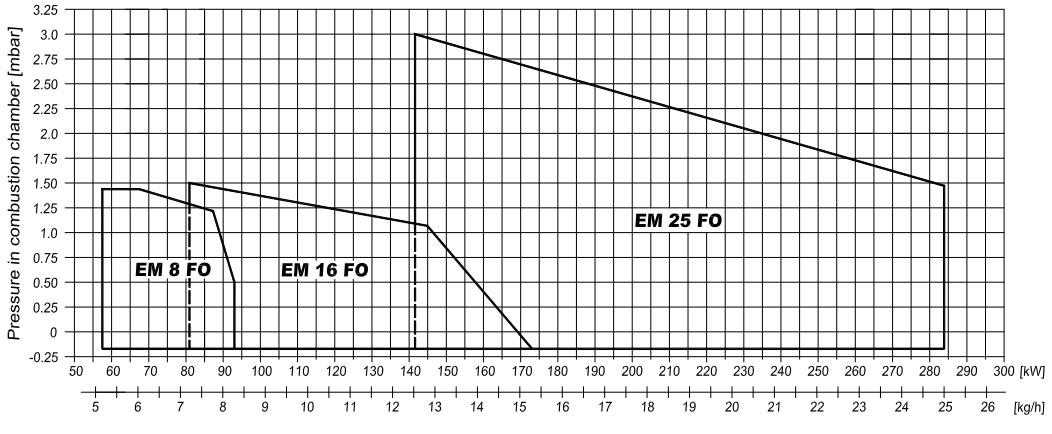

Technical data

Model	EM 8 FO	EM 16 FO	EM 25 FO
Power [kW]	58 - 93	81 - 174	142 - 284
Consumption [kg/h Heavy-oil *	5,1 – 8,2	7,1 - 16	12,5 - 25
Pump pressure [bar]	22 (Max. 28)	22 (Max. 28)	22 (Max. 28)
Motor [kW]	0,24	0,25	0,55
Electrical preheater [kW]	1,2	1,2	2,4
Electrical supply [V]	1 x 220 V 50Hz	1 x 220 V 50Hz	3 x 380 V 50Hz
Weight [kg]	-	-	-

* viscosity = 20º E at 50º C

EM-25 FO2 / EM-45 FO2 / EM-70 FO2
EM-100 FO2 / EM-125 FO2 / EM-150 FO2

2 Stages Heavy-oil Burner from 142 to 1.705 kW

98/37 CEE Directive Machinery
97/23 CEE Directive equipments to pressure PED
73/23 CEE Directive Low Voltage LV
89/336 CEE Directive Electromagnetic compatibility EMC

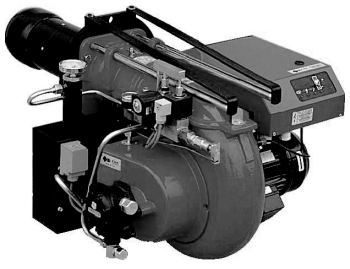

Technical description

- Fully automatic compact heavy oil burner working at two stages. Air regulation is made by a hydraulic system which is activated when the 2nd oil valve opens.
- Preheating system equipped with low density thermical resistances.
- The modern conception of the fan wheel and the protecting covering avoids the transmission of noises and vibrations.
- Burner is supplied with the electric control panel incorporated and totally wired.
- Burner is supplied with the nozzle assembled, the heavy oil connecting flexible pipes and with its oil filter.

Burner dimensions

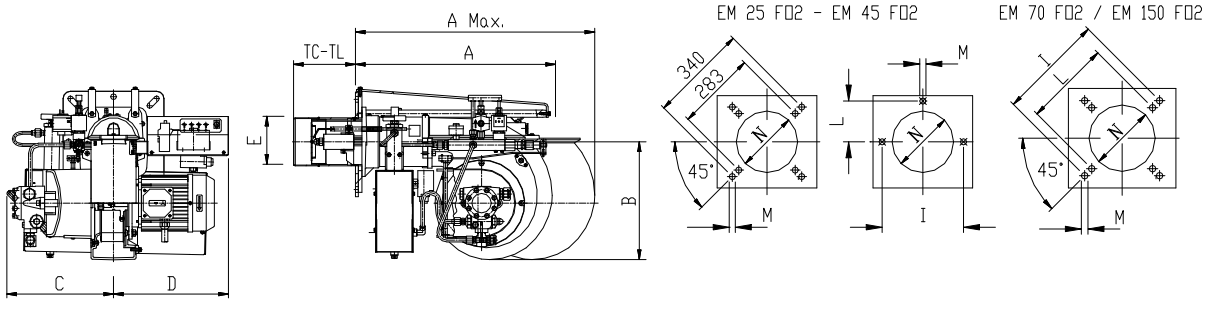

Dimensions EM 25 FO 2 / EM 45 FO 2 / EM 70 FO 2 / EM 100 FO 2 / EM 125 FO 2 / EM 150 FO 2

Dimensions in mm

Model	A	A Max.	B	C	D	ØE	TC	TL	I	L	M	ØN
EM 25 FO 2	540	950	325	295	319	135	170	350	250	125	M12	160
EM 45 FO 2	540	950	325	295	319	155	170	350	250	125	M12	160
EM 70 FO 2	660	1100	355	295	326	165	250	350	368	340	M12	180
EM 100 FO 2	656	1085	440	410	400	175	235	335	368	340	M12	190
EM 125 FO 2	820	1400	520	420	400	209	200	400	368	340	M14	230
EM 150 FO 2	820	1400	520	420	400	209	200	400	368	340	M14	230

Operating range

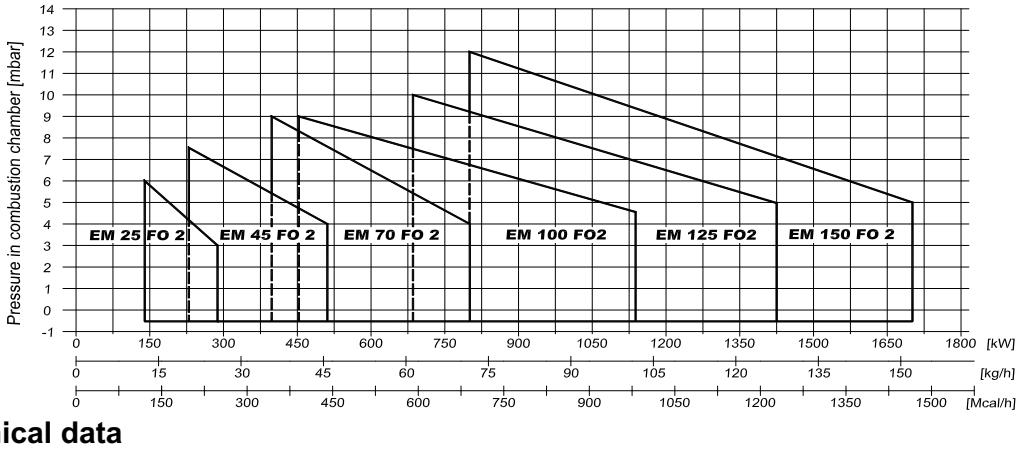

Technical data

Model	EM 25 FO 2	EM 45 FO 2	EM 70 FO 2	EM 100 FO 2	EM 125 FO 2	EM 150 FO 2
Power [kW]	142 - 284	227 - 512	398 - 796	455 – 1.137	682 – 1.421	796 – 1.705
Consumption [kg/h Heavy-oil] *	8 / 12,5 - 25	10,5 / 20 - 45	18 / 35 - 70	20,5 / 40 - 100	29 / 60 - 125	38,5 / 70 - 150
Pump pressure [bar]	24 (Máx. 28)	24 (Máx. 28)	24 (Máx. 28)	22 (Máx. 28)	22 (Máx. 28)	22 (Máx. 28)
Motor [kW]	0,74	1,1	1,5	2,2	3	4
Electrical preheater [kW]	3	4	7,4	11,2	14	17,5
Electrical supply [V]	3x220/380 V 50Hz					
Weight [kg]	-	-	-	-	-	-

* viscosity = 20º E at 50º C

EM-200 FO 3 / EM-250 FO 3

3 Stages Heavy-oil Burner from 909 to 2.842 kW

98/37 CEE Directive Machinery
97/23 CEE Directive equipments to pressure PED
73/23 CEE Directive Low Voltage LV
89/336 CEE Directive Electromagnetic compatibility EMC

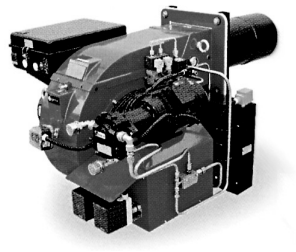

Technical description

- Fully automatic compact heavy oil burner working at three stages. Air regulation is fixed by a servomotor.
- Independent oil motorpump.
- Preheating system equipped with low density thermical resistances.
- The modern conception of the fan wheel and the protecting covering avoids the transmission of noises and vibrations.
- Burner is supplied with the electric control panel incorporated and totally wired.
- Burner is supplied with the nozzle assembled, the heavy oil connecting flexible pipes and with its oil filter.

Burner dimensions

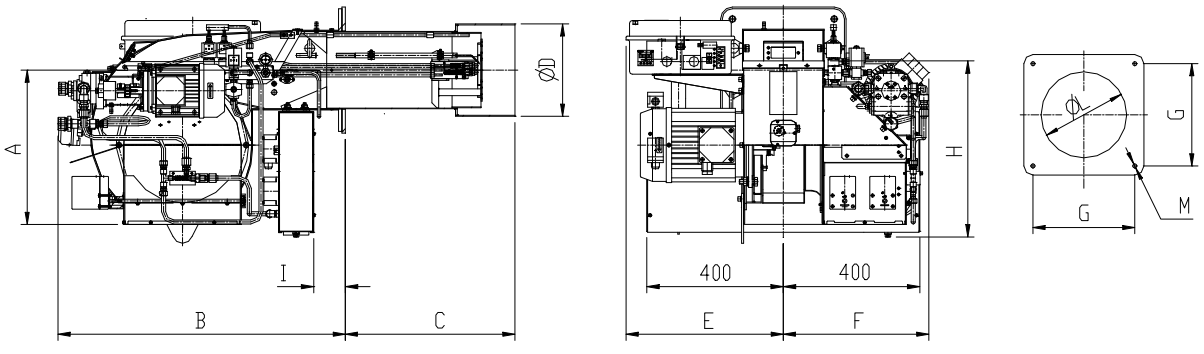

Dimensions EM 200 FO 3 / EM 250 FO 3

Dimensions in mm

Model	A	B	C	ØD	E	F	G	H	I	ØL	M
EM 200 FO 3	453	850	495	234	464	430	300	490	93	245	M14
EM 250 FO 3	453	850	500	271	464	430	300	490	93	280	M14

Operating range

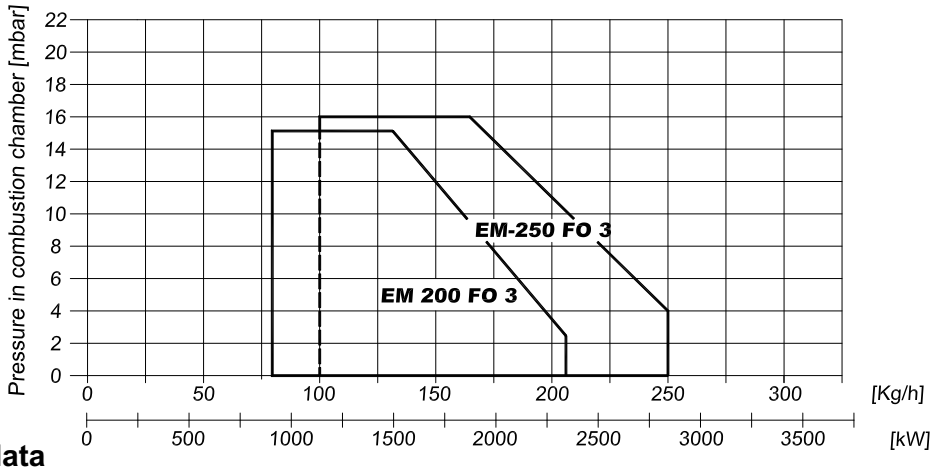

Technical data

Model	EM 200 FO 3	EM 250 FO 3
Power [kW]	909 - 2.341	1.137 - 2.842
Consumption [kg/h Heavy-oil]*	60 - 206	80 - 250
Pump pressure [bar]	24 (Máx. 30)	26 (Máx. 30)
Motor [kW]	4	7,5
Motor pump [kW]	0,75	0,75
Electrical preheater [kW]	15	20
Electrical supply [V]	3 x 220/380 V 50Hz	3 x 220/380 V 50Hz
Weight [kg]	-	-

* viscosity = 20º E at 50º C

EM-70 FO M / EM-100 FO M
EM-125 FO M / EM-150 FO M

Modulating Heavy-oil Burner from 398 to 1.705 kW

98/37 CEE Directive Machinery
97/23 CEE Directive equipments to pressure PED
73/23 CEE Directive Low Voltage LV
89/336 CEE Directive Electromagnetic compatibility EMC

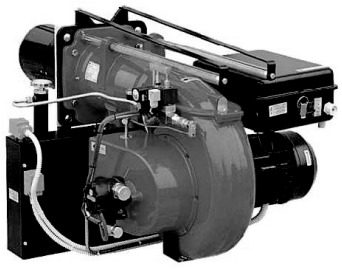

Technical description

- Fully automatic compact heavy oil burner working at modulating range. Modulation is made by means of a pressure regulator valve in the return piping, it produces a silent ignition, with no explosions. The start power can be until 35% of the nominal.
- Preheating system equipped with low density thermical resistances.
- The modern conception of the fan wheel and the protecting covering avoids the transmission of noises and vibrations.
- Burner is supplied with the electric control panel incorporated and totally wired.
- Burner is supplied with the nozzle assembled, the light oil connecting flexible pipes and with its oil filter.

Burner dimensions

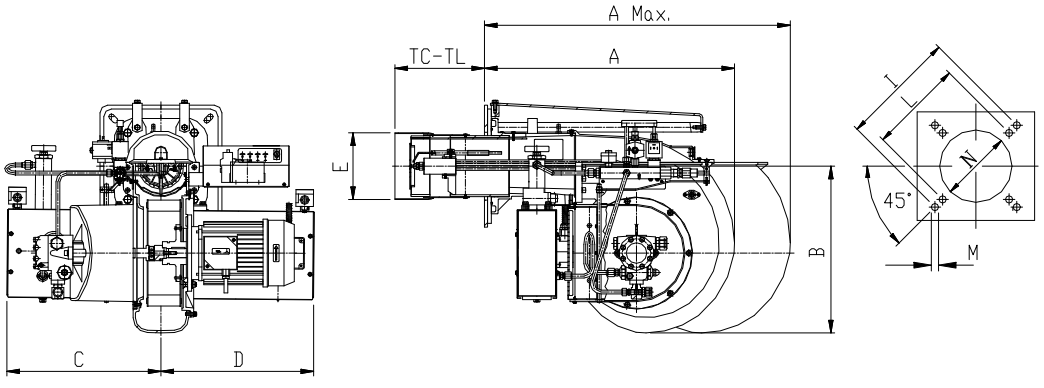

Dimensions EM 70 FO M / EM 100 FO M / EM 125 FO M / EM 150 FO M

Dimensions in mm

Model	A	A Max.	B	C	D	ØE	TC	TL	I	L	M	ØN
EM 70 FO M	660	1100	355	295	326	165	250	350	368	340	M12	180
EM 100 FO M	656	1085	440	410	400	175	235	350	368	340	M12	190
EM 125 FO M	820	1400	520	420	400	209	200	400	368	340	M14	230
EM 150 FO M	820	1400	520	420	400	209	200	400	368	340	M14	230

Operating range

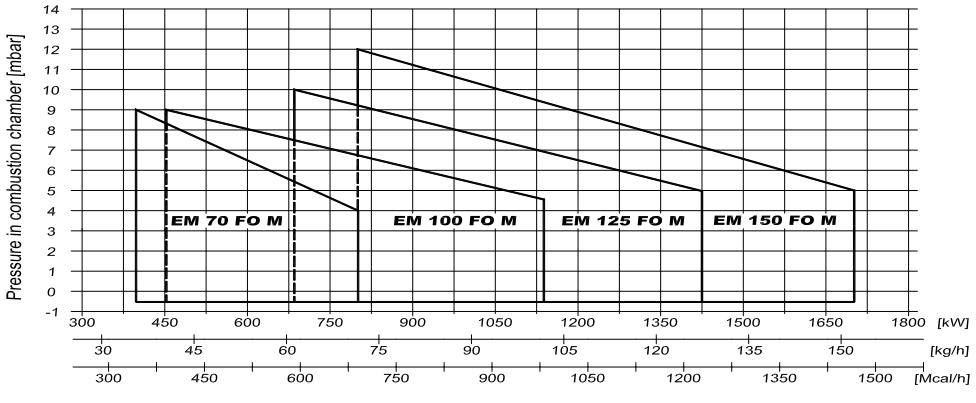

Technical data

Model	EM 70 FO M	EM 100 FO M	EM 125 FO M	EM 150 FO M
Power [kW]	398 - 796	455 – 1.137	682 – 1.421	796 – 1.705
Max. Consumption [kg/h Fuel-oil].	35 - 70	40 - 100	60 - 125	70 - 150
Pump pressure [bar]	25 - 28	25 - 28	25 - 28	25 - 28
Fan Motor [kW]	1,5	2,2	3	4
Electrical preheater [kW]	7,4	11,2	14	17,5
Electrical supply [V]	3x220/380 V 50Hz			
Weight [kg]	-	-	-	-

∗ viscosity = 20º E at 50º C

Modulating Heavy-oil Burner from 909 to 2.842 kW

98/37 CEE Directive Machinery
97/23 CEE Directive equipments to pressure PED
73/23 CEE Directive Low Voltage LV
89/336 CEE Directive Electromagnetic compatibility EMC

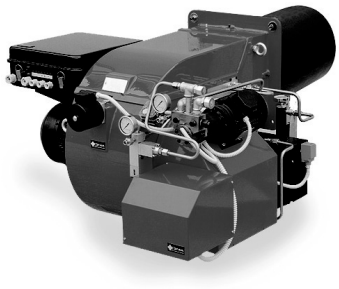

Technical description

- Fully automatic compact heavy oil burner working at modulating range. Modulation is made by means of a pressure regulator valve in the return piping, it produces a silent ignition, with no explosions. The start power can be until 35% of the nominal.
- Independent oil motorpump.
- Preheating system equipped with low density thermical resistances.
- The modern conception of the fan wheel and the protecting covering avoids the transmission of noises and vibrations.
- Burner is supplied with the electric control panel incorporated and totally wired.
- Burner is supplied with the nozzle assembled, the light oil connecting flexible pipes and with its oil filter.

Burner dimensions

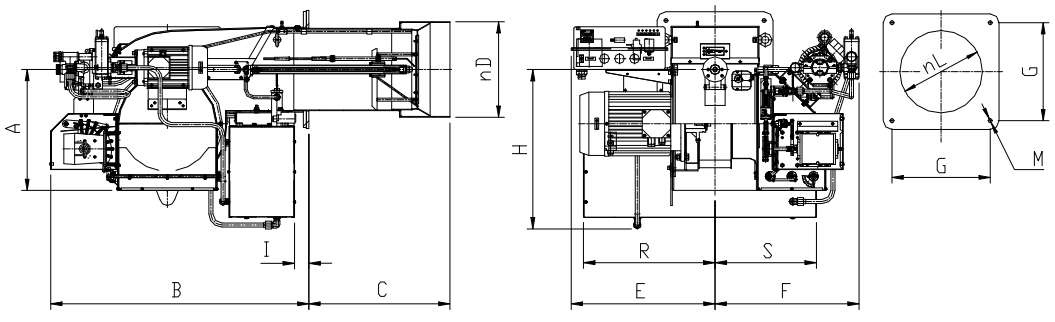

Dimensions EM 200 FO M / EM 250 FO M / EM 350 FO M / EM 450 FO M / EM 550 FO M

Dimensions in mm

Model	A	B	C	ØD	E	F	G	H	I	R	S	ØL	M
EM 200 FO M	453	920	495	234	484	536	300	490	93	400	400	245	M14
EM 250 FO M	453	920	500	271	484	536	300	490	93	400	400	280	M14

Operating range

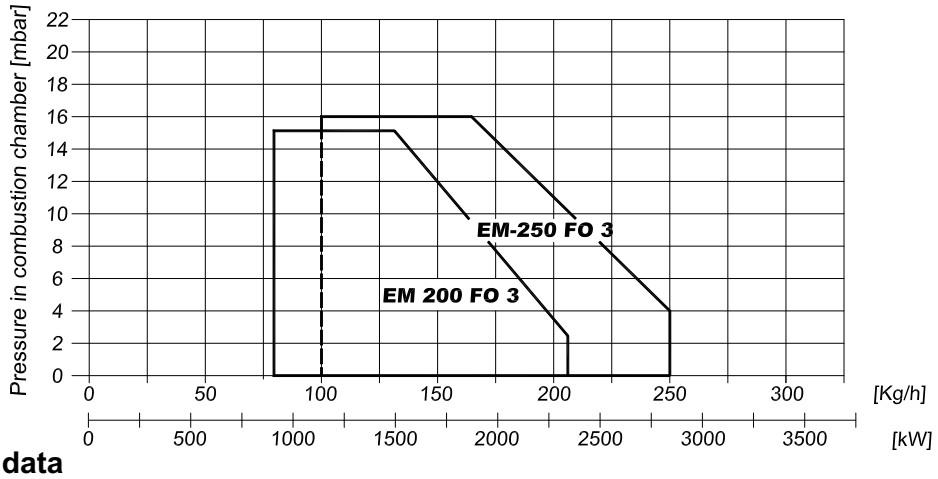

Technical data

Model	EM 200 FO M	EM 250 FO M
Power [kW]	909 – 2.341	1.137 – 2.842
Consumption [kg/h Heavy-oil]*	80 - 206	100 - 250
Pump pressure [bar]	25 - 28	25 - 28
Fan Motor [kW]	4	7,5
Pump Motor [kW]	0,75	0,75
Electrical preheater [kW]	15	20
Electrical supply [V]	3x220/380 V 50Hz	3x220/380 V 50Hz
Weight [kg]	-	-

* viscosity = 20º E at 50º C

EM-3 GLO / EM-6 GLO
EM-13 GLO / EM-20 GLO

1 Stage Dual Light oil – Gas Burner from 23 to 232 kW

98/37 CEE Directive Machinery
90/396 CEE Directive Gas Equipment s
73/23 CEE Directive Low Voltage LV
89/336 CEE Directive Electromagnetic compatibility EMC

Technical description

- Fully automatic compact gas burner one stage. Air regulation is fixed manually in the air flaps. It is incorporated in the burner the control box, motor, fan, pump, heavy-oil electrovalves, air regulation, a fitting in the combustion head makes it appropriate for any kind of gas.
- Flame detection by infrared or U.V. cell.
- Fan operating control by air pressure switch.
- Burner is supplied with the nozzle assembled, the light oil connecting flexible pipes and with its oil filter.
- Gas train is supplied fully mounted and wired, composed by:
  - Two regulating valves and one safety valve.
  - Minimum gas pressure switch.
  - Regulating gas pressure filter.

Burner dimensions

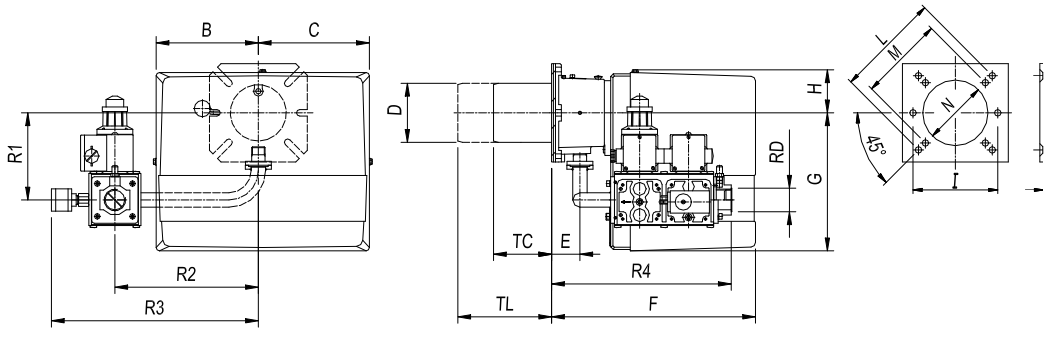

Dimensions EM 3 GLO / EM 6 GLO / EM 13 GLO / EM 20 GLO

Dimensions in mm

Model	B	C	D	E	F	G	H	I	L	M	N	O	P	TC	TL	R1	R2	R3	R4	RD
EM 3 GLO	168	168	90	45	305	210	65	130	160	130	10s	30	M8	85	145	133	200	254	244	½”
EM 6 GLO	168	168	90	45	305	210	65	130	160	130	100	30	M8	85	145	138	220	318	275	1”
EM 13 GLO	185	195	108	52	340	210	70	160	170	150	120	30	M8	130	255	168	280	378	308	1”
EM 20 GLO	185	195	125	78	368	210	70	-	226	170	135	40	M10	160	280	173	280	378	334	1”

Operating range

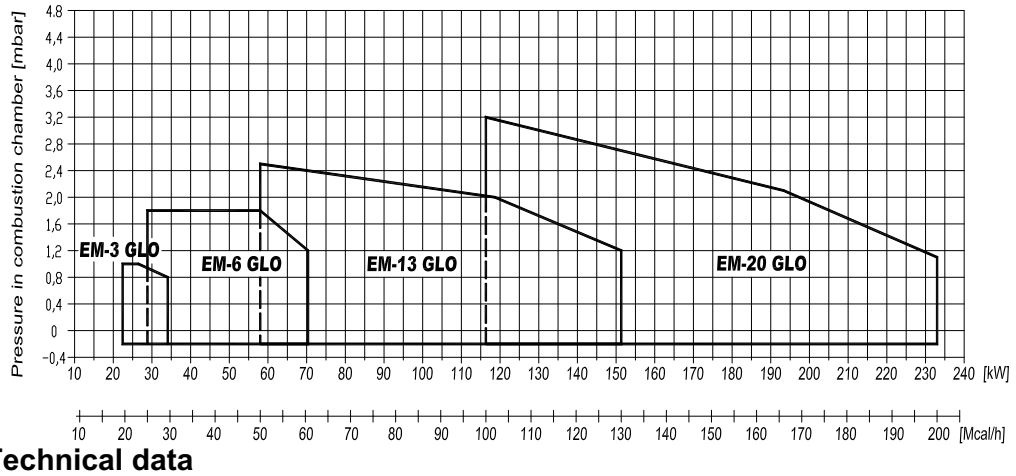

Technical data

Model	EM 3 GLO	EM 6 GLO	EM 13 GLO	EM 20 GLO
Power [kW] ∗	22,6 – 34,2	29 - 70	58,1 – 151,1	116 - 232
Consumption Heavy-oil [kg/h] ∗∗	1,9 – 2,9	2,5 – 5,9	4,9 – 12,9	9,8 – 19,9
Consumption [Nm3/h N. G.]	2,3 – 3,4	2,9 – 7,1	5,8 – 15,2	11,6 – 23,2
Min. Input P. ramp N.G. [mbar]]	20	20	20	20
Pump pressure [bar]	10 – 12 (Máx. 15)	10 – 12 (Máx. 15)	10 – 12 (Máx. 15)	10 – 12 (Máx. 15)
Motor [kW]	0,10	0,10	0,15	0,20
Electrical supply [V]	1 x 220 V 50Hz	1 x 220 V 50Hz	1 x 220 V 50Hz	1 x 220 V 50Hz
Weight [kg]	--	--	--	--

∗∗ viscosity = 1,5º E at 20º C = 6,2 cSt

EM-20 GLO 2 / EM-45 GL2 / EM-70 GLO 2 EM-100 GLO 2 / EM-130 GLO 2 / EM-250 GLO 2

2 Stages Dual Light oil – Gas Burner from 116 to 2900 kW

98/37 CEE Directive Machines
97/23 CEE Directive Pressure Equipments
73/23 CEE Directive Low Voltage
89/336 CEE Directive Electromagnetic Compatibility

Technical Description

- Fully self-running at two stages gas – light oil monobloc burner regulating the air by an actuator. It is incorporated in the burner the control box, motor, fan, air regulation, burnerhead.
- External motopump for working with light oil (optional in EM20 and EM 45).
- Flame detection by infrared or U.V. cell.
- Fan operating control by air pressure switch.
- Burner is supplied with the nozzle assembled and with its light oil connecting pipes and filter.
- Gas train is supplied fully mounted and wired, composed by:
  - Two regulating valves and one safety valve.
  - Minimum gas pressure switch.
  - Regulating gas pressure filter.

Burner Dimensions

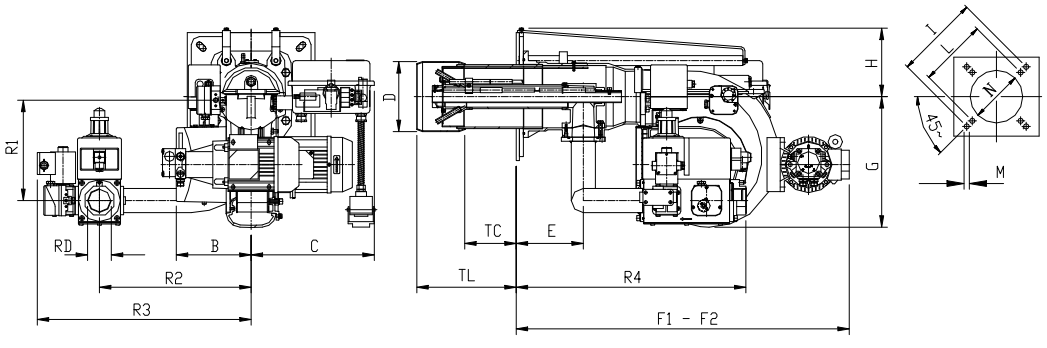

Dimensions EM 20 GLO 2 / EM 45 GLO 2 / EM 70 GLO 2 / EM 100 GLO 2 / EM 130 GLO 2 / EM 250 GLO 2

Dimensions in mm

Model	B	C	D	E	F1	F2	G	H	I	L	M	N	TC	TL	R1	R2	R3	R4	RD
EM 20 GLO 2	188	306	135	98	493	--	327	110	226	205	M10	145	250	350	171	280	411	354	G 1”
EM 45 GLO 2	188	306	150	98	493	--	327	110	226	205	M10	160	250	350	203	280	432	456	G 1 ½”
EM 70 GLO 2	188	308	175	168	840	1.280	327	171	368	340	M12	185	250	385	260	380	536	576	G 1 ½”
EM 100 GLO 2	238	372	185	184	840	1.340	438	173	368	340	M12	195	250	385	260	380	536	591	G 2”
EM 130 GLO 2	238	372	210	193	980	1.560	438	213	368	340	M14	220	280	400	260	380	536	591	G 2”
EM 250 GLO 2*	363	460	265	145	876	--	453	185	424	424	M14	280		495	275	520	674	688	DN65

* Gas service and air inlet are on the right side. Fan-motor and operator control panel are on the left side.

Operating range

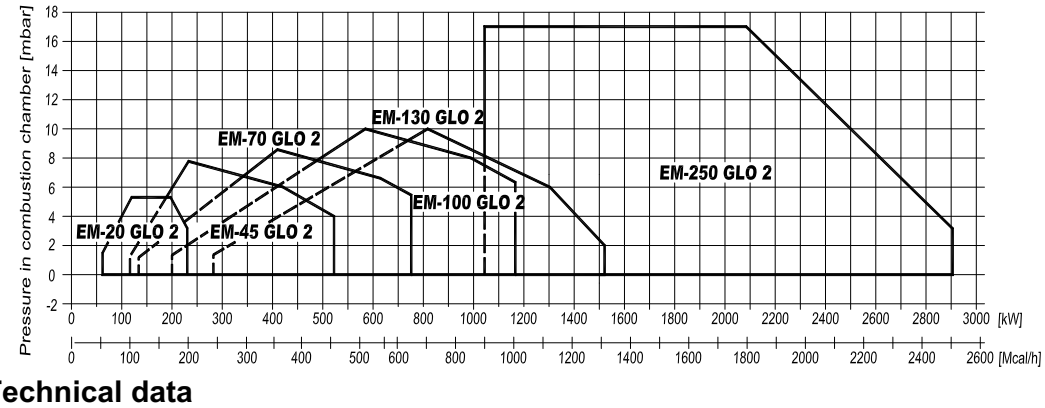

Technical data

Model	EM 20 GLO 2	EM 45 GLO 2	EM 70 GLO 2	EM 100 GLO 2	EM 130 GLO 2	EM 250 GLO 2
Power [kW] ∗	63,8 / 116–232	116 / 232–523	135 / 406–754	200 / 581–1.163	279 / 1.046–1.508	1.046 – 2.907
Consumption [kg/h light oil] ∗∗	5,4 / 10 –20	10 / 20–45	11,5 / 35 – 65	17 / 50 – 100	23,5 / 70 – 130	9,8 – 19,9
Maximum consumption [Nm^3 /h N.G.]	6,4 / 11,7–23	11,7 / 23,4–52	13,5 / 41–76	20 / 58,4–117	28 / 81,7–151	11,6 – 23,2
Minimum P at gas train N.G. [mbar]	48	20	40	35	60	80
Pump pressure [bar]	10–12 (Máx. 15)	10–12 (Máx. 15)	10–12 (Máx. 15)	10–12 (Máx. 15)	10–12 (Máx. 15)	10–12 (Máx. 15)
Motor [kW]	0,24	0,74	1,1	2,2	3	0,20
Power Supply [V]	1x220 V 50Hz	3x220/380V 50Hz	3x220/380V 50Hz	3x220/380V 50Hz	3x220/380V 50Hz	3x220/380V 50Hz
Weight [kg]	--	--	--	--	--	--

∗ Min. 1st stage / Min. 2nd stage – Max. 2nd stage
∗∗ Viscosity= 1,5º E at 20º C = 6,2 cSt

E&M Combustión

www.emcombustion.es

energía y medio ambiente

Polígono Industrial Bildosola P.F.3 / P.F.4
48142 Artea
Vizcaya (SPAIN)
Teléfono: (+34) 94 453 01 43
Fax: (+34) 94 453 01 43
oficina@emcombustion.es